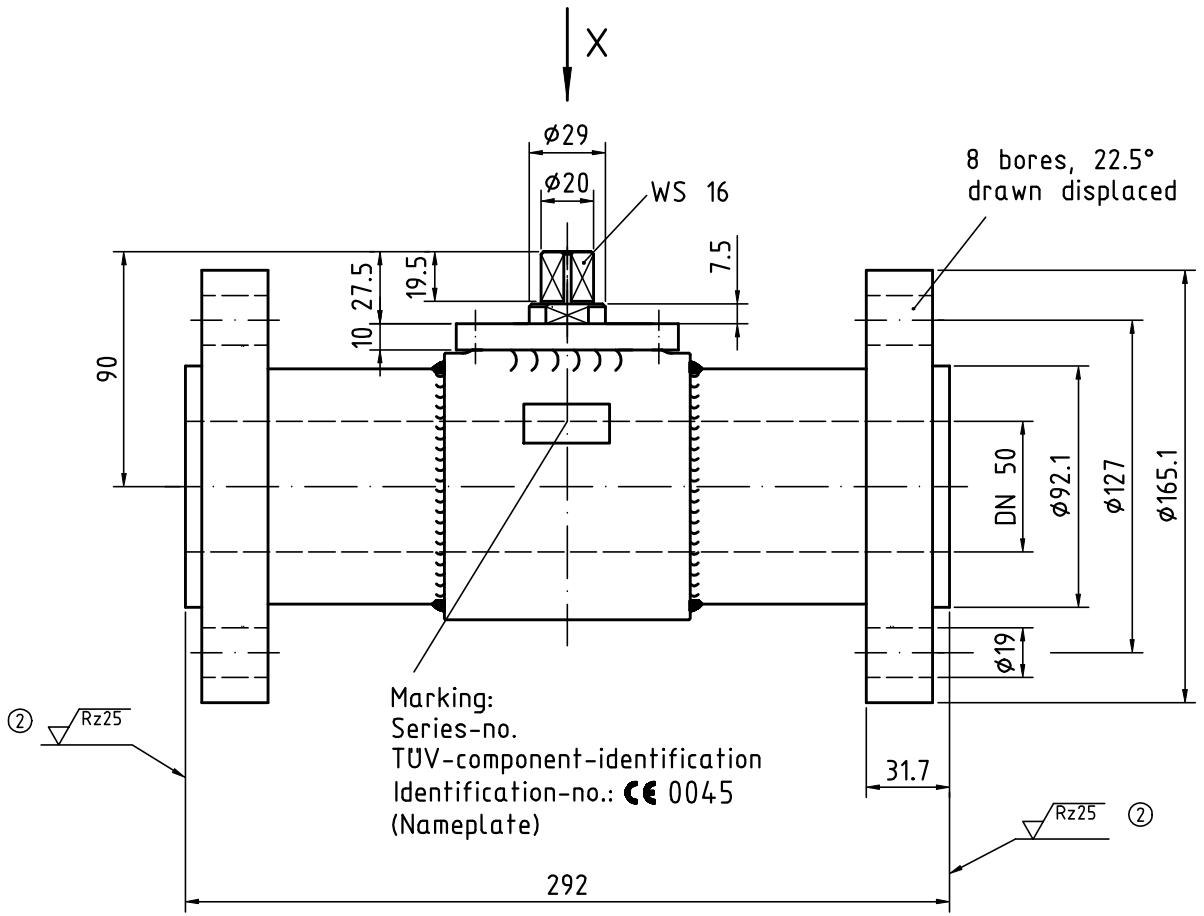

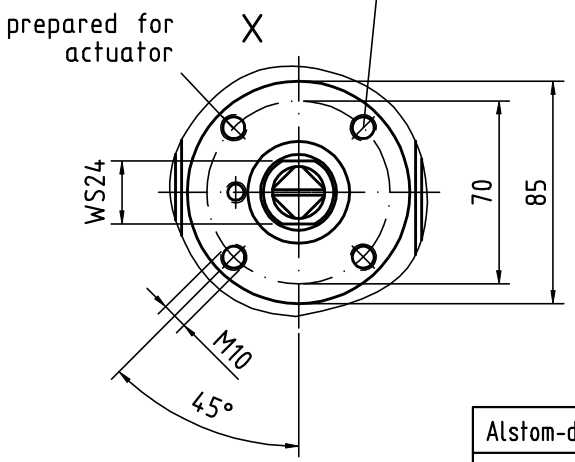

for mounting plate edp-no.
081.9053 F 07 / WS 17

Alstom-drawing-no.
HTCT 435409 ① HTCT 438552 HTCT 620333
Item: P1 = 057.3740 Starting torque: 130 Nm
Weight: 17.2 kg

0 20 40 60 80 100 120 140 160 180 200

N°	REVISION	DATE	NAME
3	was 150°C/55bar; Drwg. revised	17.01.08	Weh.
2	was Rz63	14.11.05	Gayk
1	was Interzinc 22	23.02.04	Gayk
7			
6			
5			
4			

2005	DATE	NAME
DRAWN	15.08.	Gayk
CHECKED		
NORM		

MATERIAL
Page 1/3

BÖHMER

SCALE
1:2

DIMENSIONS WITHOUT TOLERANCES ACC.TO:
DIN ISO 2768 T.1-M
DIN ISO 2768 T.2-K
DIN 1683

Ball valve FKA/FSA-V
DN50 A600-RF
PS 63 bar / TS +170°C
EG-type-tested

ALL RIGHTS IN THIS DRAWING RESERVED, ALSO IN CASE OF PATENT OR DESIGN REGISTRATION

REPLACEMENT FOR: HTCT 420496
REPLACED BY:

DRAWING-N°:
9.057.050.013.00.03

DOCU-N°:
0573740-03-GB-01-2D

EDP-N°:
057.35050063.3740

Special coating:

1.) Blasting according SA 2,5

2.) Prime coat:
Zink epoxy
Name of manufacturer:
Interzinc 52 ①
Thickness of coating: 75 µm

3.) Finish coat:
Two pack epoxy polyamide
Name of manufacturer:
International Intergard 475
Thickness of coating: 100 µm

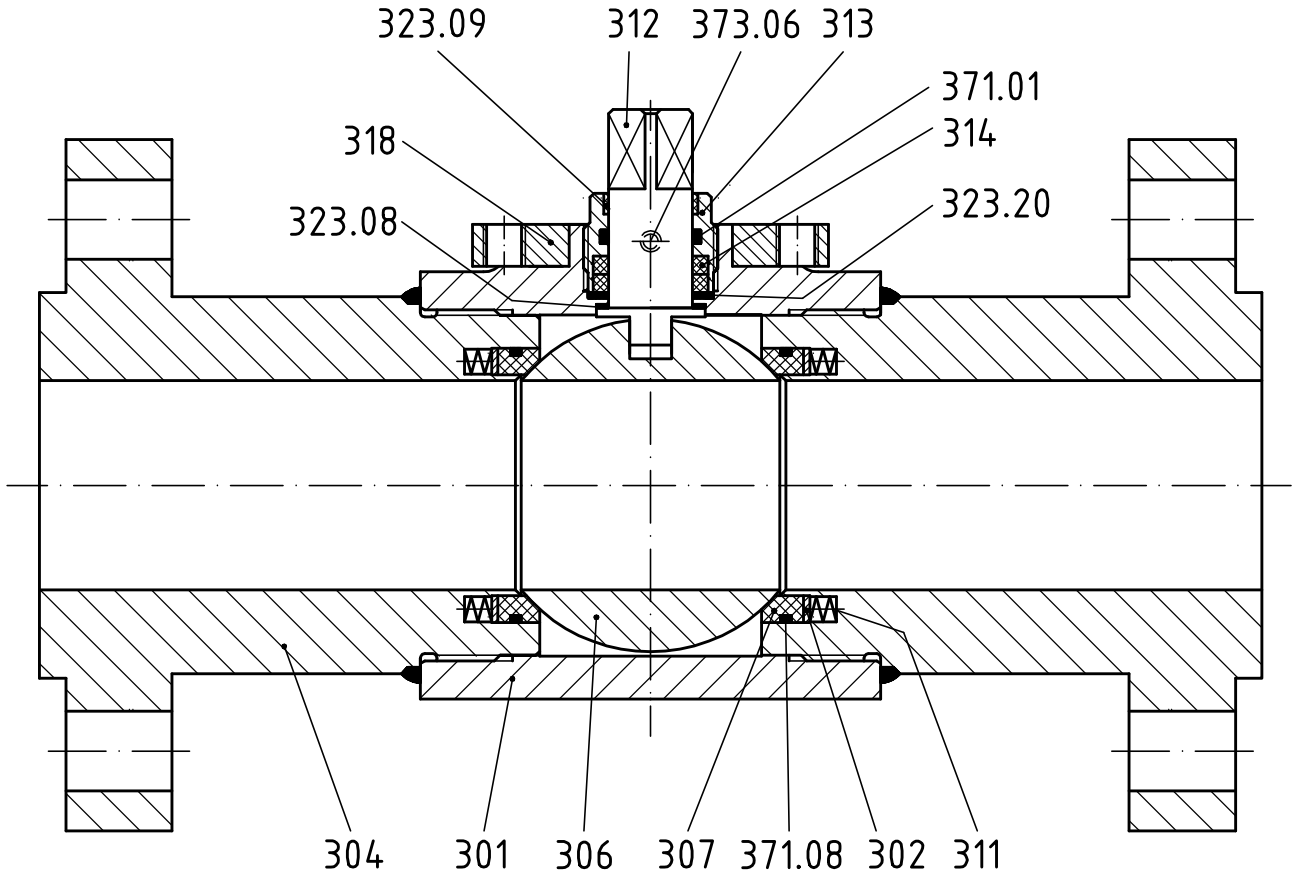

- gas-construction -

- allowable working temperature TS = +170°C - ③

- allowable working pressure PS = 63 bar - ③

- anti-static-design -

- fire-safe-design -

Test content	Alstom-drawing-no.
Tests acc. to DIN 3230 Teil 5 PG 3	HTCT 435409 ①
# with material-test certificate according EN 10204-3.2	HTCT 438552
	HTCT 620333

	DATE	NAME
2005		
DRAWN	15.08.	Gayk
CHECKED		
NORM		

MATERIAL: Page 2/3

BÖHMER

N°	REVISION	DATE	NAME
3	was 150°C/55bar; Drwg. revised	17.01.08	Weh.
2	was Rz63	14.11.05	Gayk
1	was Interzinc 22	23.02.04	Gayk

SCALE 1:2

DIMENSIONS WITHOUT TOLERANCES ACC.TO: DIN ISO 2768 T.1-M, DIN ISO 2768 T.2-K, DIN 1683

Ball valve FKA/FSA-V
DN50 A600-RF
PS 63 bar / TS +170°C
EG-type-tested

ALL RIGHTS IN THIS DRAWING RESERVED, ALSO IN CASE OF PATENT OR DESIGN REGISTRATION

REPLACEMENT FOR: HTCT 420496

REPLACED BY:

DRAWING-N°: 9.057.050.013.00.03

DOCU-N°: 0573740-03-GB-02-2D

EDP-N°: 057.35050063.3740

Alstom-drawing-no.

HTCT 435409
HTCT 438552 ①
HTCT 620333

Pos.-no.	Piece	Part name			Material
373.06	1	Set screw	M5×10	DIN 914	Stainless steel
371.08	2	O-ring	60-2		FPM
371.01	1	O-ring	20.3-2.4		FPM
323.20	1	Flat seal ring	⌀30x⌀20.1x1		GRAPHITE/Stainless steel
323.09	1	Seal ring	⌀22.05x⌀19.9x5		PTFE
323.08	1	Bearing	⌀25x⌀20.1x0.5		PTFE
318	1	ISO-flange	F 07		Steel
314	2	Packing ring			GRAPHITE
313	1	Gland			Stainless steel 1.4305
312	1	Stem			Stainless steel 1.4006V (AISI 410) ①
311	20	Spring			Stainless steel (high temperature-construction)
307	2	Body seat ring			PEEK
306	1	Ball			Steel, hard chrome coated
304	2	Flange			Steel TStE355 / P355NL1 (A350 LF2) # ①
302	2	Thrust collar			Steel
301	1	Body			Steel TStE355 / P355NL1 (A350 LF2) #

N°	REVISION	DATE	NAME
1	was Interzinc 22	23.02.04	Gayk
2	was RZ63	14.11.05	Gayk
3	was 150°C/55bar; Drwg. revised	17.01.08	Weh.
4			
5			
6			
7			

2002	DATE	NAME
DRAWN	08.08.	Gayk
CHECKED		
NORM		

MATERIAL
Page 3/3

BÖHMER

SCALE
1:2

DIMENSIONS WITHOUT TOLERANCES ACC.TO:
DIN ISO 2768 T.1-M
DIN ISO 2768 T.2-K
DIN 1683

Ball valve FKA/FSA-V
DN50 A600-RF
PS 63 bar / TS +170°C ①
EG type tested

ALL RIGHTS IN THIS DRAWING RESERVED, ALSO IN CASE OF PATENT OR DESIGN REGISTRATION

REPLACEMENT FOR: HTCT 420496
REPLACED BY:

DRAWING-N°:
9.057.050.013.00.03

DOCU-N°:
0573740-03-GB-03-2D

EDP-N°:
057.35050063.3740