1.0 RIDUTTORI A VITE SENZA FINE R - CR - C
1.0 WORM GEARBOXES R - CR - C
1.0 SCHNECKENGETRIEBE R - CR - C

R-CR-C

1.1	Caratteristiche tecniche	*Technical characteristics*	Technische Eigenschaften	B1
1.2	Designazione	*Designation*	Bezeichnungen	B4
1.2	Versioni	*Versions*	Ausführungen	B5
1.4	Lubrificazione	*Lubrication*	Schmierung	B16
1.5	Carichi radiali e assiali	*Axial and overhung loads*	Radiale und Axiale Belastungen	B24
1.6	Prestazioni riduttori	*Gearboxes performances*	Leistungen der Getriebe	B27
1.7	Prestazioni motoriduttori	*Gearmotors performances*	Leistungen der Getriebemotoren	B42
1.8	Dimensioni	*Dimensions*	Abmessungen	B80
1.9	Accessori	*Accessories*	Zubehör	B98

B

1.1 Caratteristiche tecniche

RI-RMI - Il rinnovamento del prodotto principale dell'azienda, prevede sostanzialmente tre innovazioni: due tecnologiche e una commerciale
E' stata utilizzata la pressofusione per tutti i particolari in alluminio (dalla grandezza 28 alla 85) per migliorare la resistenza flessotorsionale viene da anni adottato il profilo ZI per la dentatura (sezione ad evolvente) per migliorare il rendimento e la silenziosità ed infine è stata introdotta la flangiatura modulare in uscita (FL) per aumentarne la flessibilità.

Nuove idee per crescere insieme: per primi dal 1987 con il brevetto del limitatore di coppia integrato all'interno del riduttore standard.

CRI-CRMI - Semplicemente unendo due unità a vite senza fine, otteniamo questa serie di riduttori per applicazioni con rapporti molto lenti: basso rendimento ma alta competitività e silenziosità Ovviamente sono disponibili tutti gli accessori della serie R , quali le viti bisporgenti in entrata, i conici sulla corona uscita, il limitatore di coppia, albero lento e il braccio di reazione.

CR-CB - Nella realizzazione di questi riduttori, ha dominato la scelta tecnica di realizzare un unico carter che contenesse tutti gli ingranaggi
Questa soluzione consente un efficiente smaltimento del calore unitamente ed una elevata rigidità e semplicità di applicazione
Gli effetti più positivi si riflettono sul rendimento, sulla durata e sulla coppia trasmissibile che la logica del compromesso costo/ prestazioni ne esalta la convenienza tra i rapporti intermedi.

1.1 Technical characteristics

RI-RMI - The company has decided to update main product by adding three innovative principles : two technical and one commercial.
All components in aluminium are die casted (from size 28 to size 85) to increase resistance to torsional and structure flexibility.
ZI teething profile (section and involute) has been adopted to increase efficiency and silentness.
Finally, a modular attachable output flange (FL) has been adopted to increase flexibility.

New ideas to approach a bigger market together: first since 1987 the patent of the torque limiter built inside our standard gearbox.

CRI-CRMI - Simply to connect two worm gear, we obtain this gearboxes series for applications with low ratios: less efficiency but high competitivity and silentness.
All accessories of the series R are available, such as double extension input, output taper bearing, torque limiter, output solid shaft and torque arm.

CR-CB - When designing this range of gearbox, STM technicians decided to project one single body to include all gears.
This solution allows an efficient heat dissipation as well as a high housing rigidity and application easiness.
Efficiency will then be positively improved but also longevity and highest transmittable torque.
The compromise cost/performances is particularly centered in the middle range reduction ratios.

1.1 Technische Eigenschaften

RI-RMI - Die Erneuerung des Kernprodukt des Unternehmens bietet drei wesentliche Innovationen: zwei technische und eine wirtschaftliche.
Es wurde für alle Aluminium-Teile (ab Größe 28 bis 85) das Druckgießverfahren angewendet, um den Biege-Widerstand zu verbessern. Für die Evolventenverzahnung wurde das Profil ZI verwendet, um die Leistung und Geräuschlosigkeit zu verbessern, und letztendlich wurde der modulare Ausgangsflansch (FL) eingeführt, um die Flexibilität zu erhöhen.

Neue Ideen für gemeinsames Wachstum: Seit 1987 nennen wir den Einbau des Drehmomentbegrenzers im Inneren unserer Standardgetriebe unser Patent.

CRI-CRMI - Durch die einfache Kombination von zwei Schneckeneinheiten erhalten wir diese Getriebereihe für sehr langsame Anwendungsverhältnisse: niedrige Leistung, aber hohe Wettbewerbsfähigkeit.

Selbstverständlich stehen alle Zubehörteile der Baureihen R zur Verfügung.

CR-CB - Bei der Herstellung dieser Getriebe lag der technische Schwerpunkt auf der Konstruktion eines einzigen Gehäuses, das alle Zahnräder beinhaltet.
Diese Lösung ermöglicht eine effiziente Wärmeableitung sowie eine hohe Steifigkeit und eine einfache Handhabung.
Die positiven Auswirkungen spiegeln sich bei der Leistungsfähigkeit, der Dauer und der Drehmomentübertragung wider. Der notwendige Kompromiss zwischen Preis / Leistung erweist sich als äußerst vorteilhaft für mittlere Übersetzungsverhältnisse.

1.1 Caratteristiche tecniche

Carattestiche giunto STM

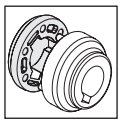

- Ingombri ***Ridotti***;
- Semplicità di connessione;
- ***NO*** Fretting;
- ***NO*** Vibrazioni;
- Progettato per garantire efficienza e affidabilità con servizi gravosi in presenza di urti e con numerosi avviamenti.

1.1 Technical characteristics

STM Special features - Coupling

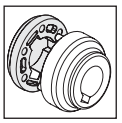

*-**Reduced** Sizes*
-Simplified connections
*-**No** fretting*
*-**No** vibrations*
-Designed in order to warrant efficiency and reliability with heavy duty in case of bumps and frequent start-upsSimplified connections

1.1 Technische Eigenschaften

Die STM Sondernmerkmale - Kupplung:

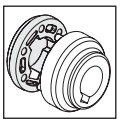

-Verringerter Platzbedarf;
-Einfacher Anschluss;
-Keine Abnutzung;
-Keine Vibrationen;
-Gewährleistet Effizienz und Zuverlässigkeit bei hoher Belastung, Stossbeeinträchtigung und zahlreichen Maschinen-Starts.

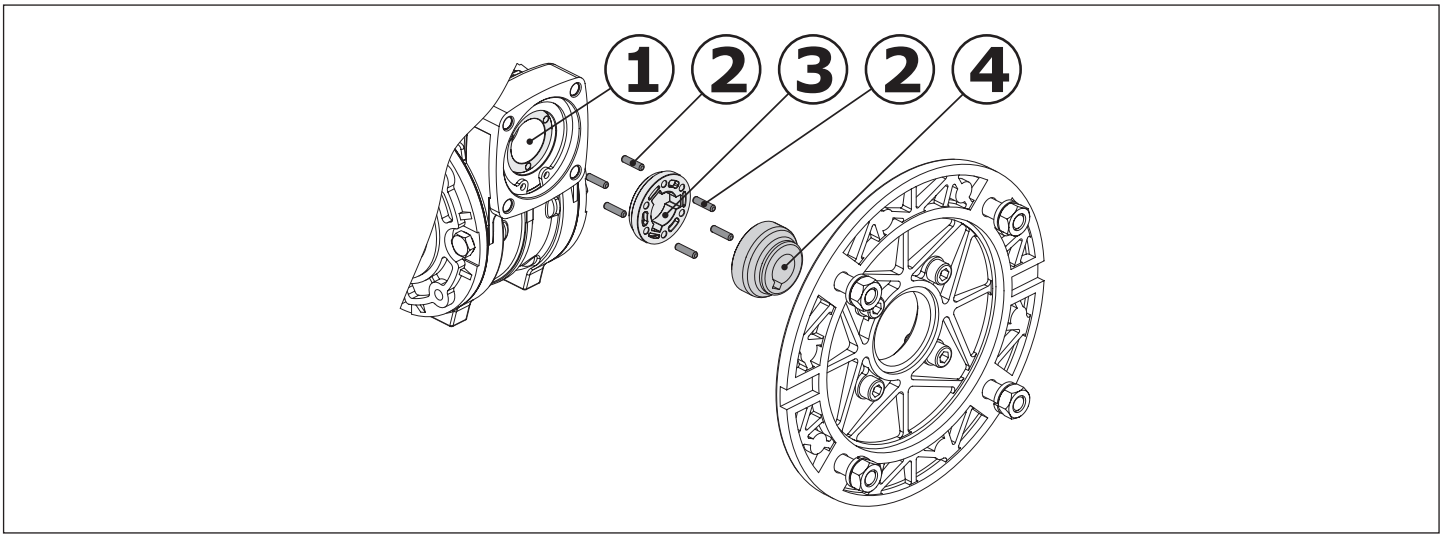

MATERIALE:
1 - Vite senza fine
Acciaio Cementazione;
2 - Pioli - - Acciaio per cuscinetti
3 - Giunto - Tecnopolimero PA 46
4 -Semigiunto - Acciaio da bonifica.

MANUTENZIONE:
-Facilità di Montaggio motore;
-Facilità di Smontaggio

MODULARITA':
-Possibilità di utilizzare il giunto sulle serie "**RMI**" - "**CRMI".**

TEMPI DI CONSEGNA:
-Maggiore modularità del prodotto;
-Stock a magazzino del prodottoassemblato.

MATERIAL:
1 - Worm gear – cementation steel
2 – Pin – bearing steel
3 - Coupling – techno polymer PA 46
4 – Coupling half - tempered steel

MAINTEINANCE:
-Easy motor assembly;
-Easy disassembly.

MODULARITY:
*Possibility of coupling's using specially those of **"RMI**" - "**CRMI" series.***

DELIVERY DATES
-Higher product's modularity
-Stock warehouse finished product.

MATERIAL:
1 – Schneckenwelle - Einsatzstahl
2 – Stifte – Lagerstahl
3 – Kupplung – Technopolymer PA 46
4 – Kupplungshälfte – Stahl wärmebehandelt

WARTUNG:
-Einfacher Motoreinbau;
-Einfacher Ausbau.

MODULARITÄT
Die Kupplung kann in den Serien „**RMI**" - „**CRMI...G**" verwendet werden.

LIEFERZEITEN:
-Größere Modularität des Produktes;
-Montiertes Produkt imLaberbestand

1.1 Caratteristiche tecniche

Limitatore di coppia STM

ATTENZIONE !
Il limitatore di coppia non può essere considerato in alcun caso un dispositivo per la sicurezza dell'operatore ma solo un sistema di protezione della macchina.

Il limitatore di coppia STM è utile in tutti i casi nei quali si voglia proteggere una trasmissione da sovraccarichi, urti e qualunque irregolarità della coppia assorbita dall'utilizzatore.

La scelta ottimale dei materiali della corona (bronzo GCuSn12 UNI 7013) e dell'albero e della bussola (acciaio temprato e rettificato) consente di garantire delle durate molto elevate anche in presenza di frequenti slittamenti.
Nei confronti delle frizioni tradizionali pre- senta numerosi vantaggi:

- è incorporato, senza variazioni dimen- sionali, nei riduttori a vite senza fine semplici RI/RMI, combinati CRI/CRMI e con precoppia CR/CB nella gamma delle grandezze 28,40,50,63,70,85, 110,130,150.
- è protetto da qualunque contaminante (acqua, polvere, olio, grasso),ecc.
- è concepito per lavorare a bagno d'olio, cosa che lo rende affidabile nel tempo ed esente da usura.
- è facilmente regolabile dall'esterno tra mite il serraggio di un dado esagonale.
- può slittare anche per diversi minuti senza danneggiarsi.

Il limitatore di coppia è montato nel riduttore utilizzando cuscinetti radiali **ed esclu- dendo l'applicazione di cuscinetti conici** in quanto i carichi assiali generati da questi ultimi provocherebbero alterazioni nella taratura del limitatore stesso.
Nel par. 1.6 sono riportati i valori della coppia di slittamento del limitatore in funzione del numero di giri del dado di regolazione o della ghiera.
Ricordiamo inoltre che su specifica richie- sta, nei riduttori combinati, è possibile montare il limitatore di coppia sul primo riduttore (più piccolo) con la possibilità di mantenere l'irreversibilità del gruppo, qualora la scelta dei rapporti la preveda, e con un costo più contenuto del dispositivo.

Configurazioni:

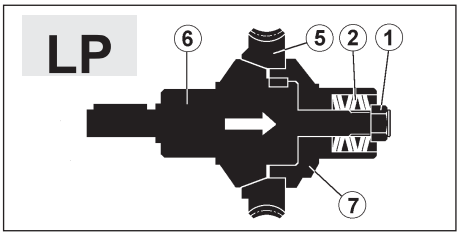

Facendo riferimento alle figure, la trasmis- sione del moto avviene per attrito fra le su- perfici dell'albero (6) della corona dentata (5) e della bussola (7) che vengono sotto- poste ad una determinata compressione (regolabile) per mezzo dell'azione eserci- tata sulle molle a tazza (2) dal dado di rego- lazione o dalla ghiera (1).

1.1 Technical characteristics

STM torque limiter

ATTENTION !
The torque limiter can not be considered as a security device for the operator but as a protection system for the machine.

STM torque limiter is useful in all those cases where it is necessary to protect a transmission from overloads, shocks and any other torque irregularities.

The perfect choice of the wormheel mate- rial (bronze GCuSn12 UNI 7013) together with the shaft and bushings which are made out of ground and hardened steel, enable the manufacturer to guarantee long life even with frequent slippings.
Several are the advantages that it offers when compared with traditional clutches:

- *it is built-in in the wormgearboxes type RI-RMI, in the combined units type CRI/CRMI and with primary reduction type CR/CB in sizes 28,40,50, 63,70,85,110,130,150 without any design modifications.*
- *it is protected from any possible polluting agents (water, dust, oil, grease) etc.*
- *it has been designed for oil-bath operation therefore reliable and wearfree.*
- *it is easily adjustable from outside by turning a standard hexagonal nut.*
- *it can slip for several minutes at a time without damage.*

*The torque limiter is assembled on to the gearbox by means of radial bearings **and not taper roller bearings** since the axial loads created by them could alter the calibration of the torque limiter itself.*
On chapter 1.6 are listed the values of the slipping torque of the torque limiter in operation and of the nut's number of turns.
It is important to draw the attention on the fact that, upon request, it is possible to assemble the torque limiter on to the first gearbox (the smaller one) in the combined units and this will not affect the irreversibility of the unit depending on the ratios of the gearboxes. As a result the unit will certainly be less expensive.

Versions:

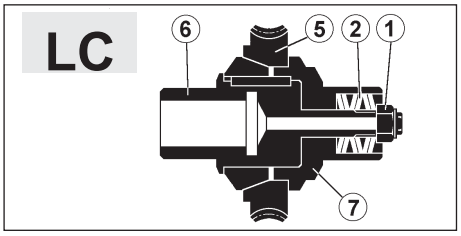

With reference to pictures shown below, transmission of movement takes place by means of friction between the shaft, the wormwheel and the bushing.They are infact subject of a determined compression (which can be adjusted) created by the effect of the nut on the washers.

1.1 Technische Eigenschaften

Die STM Rutschkupplung

ACHTUNG !
Bei der Rutschkupplung handelt es sich nicht um eine Sicherheits- vorrichtung für das Bedienpersonal, sondern um ein Schutzsystem für die Anlage.

Ist ein Schutz vor Überlastungen, stoßartigen Belastungen etc. erforderlich, so ist die integrierte Rutschkupplung von STM eine unentbehrliche Zusatzausstattung.

Eine optimale Werkstoffkombination - beim Schneckenrad Bronze GCuSn 12 Uni 7013 und bei der Welle gehärteter und geschliffener Stahl - garantieren auch bei häufigem Schlupf eine hohe Lebensdauer
Sie bietet immer dann Vorteile, wenn die normale Belastung eines Antriebes über- schritten wird.

- Integriert in die Standardschneckenge- triebe RI/RMI, Doppelschneckengetriebe CRI/CRMI und Stirnradschneckengetrie- be CR/CB; alle Ausführungen in den Größen 28, 40, 50, 63, 70, 85, 110, 130 und 150.
- durch die integrierte Bauweise geschützt gegen äußere Einflüsse wie Staub, Wasser, Öl, Fett, etc.
- im Ölbad laufend, dadurch zuverlässig und wartungsfrei.
- einfache Drehmomenteinstellung durch eine von außen zugängliche Einstellmutter.
- Schlupf über einen längeren Zeitraum hinweg fügt der Kupplung keinen Schaden zu, allerdings ist die erhöhte Erwärmung bei Dauerschlupf zu beachten.

Schneckengetriebe mit Rutschkupplung können nur mit Radiallagern ausgestattet werden. Zur Einstellung des Schlupf- momentes ist eine Axialverschiebung des Druckringes erforderlich, was den Einsatz von Kegelrollenlagern verhindert.
Das gewünschte Schlupfmoment kann mit Hilfe der Einstellmutter auf Basis der Werte kapitel 1.6 eingestellt werden.
Bei Doppelschneckengetrieben ist es auf Wunsch möglich, die Rutschkupplung in die erste Stufe zu integrieren. Dadurch wird die mögliche Selbsthemmung des Getriebes erhalten und die Rutschkupplung kann kleiner dimensioniert werden.
Dies ist jedoch nur bei geeigneten Untersetzungsverhältnissen möglich.

Ausgangswellenausführungen:

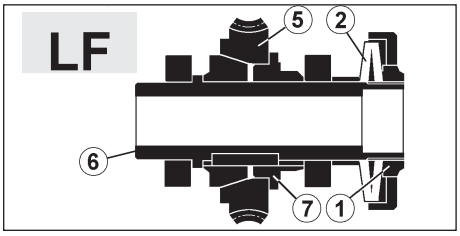

Die Drehmomentübertragung findet durch Reibschluß zwischen dem Konus der Abtriebswelle und dem Schneckenrad statt.
Die (einstellbare) Reibkraft wird durch die auf den Druckring wirkende Kraft der Tellerfedern erzeugt.

1.2 Designazione — *1.2 Designation* — 1.2 Bezeichnung

WEB: Reference Designation

Maschine	Typ Connection	Size	Output Version	Mounting Version	Output Flange	Reduction ratio	IEC type and Input Shaft	Input Version	Input Shaft	*Designation Motors*	Double Extended Input Shaft	Tapered Output Bearings	Limiter Output Version	Limiter Output Motion	Limiter HEAVY Calibration	Limiter Scope of Supply	Type Shaft Diameter	Shaft Diameter	Mounting Position Output Flange	Mounting positions	Position Terminal Box
00 M	01 Tycon	02 SIZE	03 OV	03a MV	03b OF	04 IR	05 IECT	06 IV	07 IS		08 BE	09 TOB E	10 LOV	11 LOM	12 LHC	13 LSO S	14 TYP SD	15 SD	16 MPO F	17 MP	19 PMT

"RMI 40 S 1/7 71B5 LCB TM" - CODE: Example of order

R	MI I	28 40 50 63 70 85 110 130 150 180 215 250	S I D P FL F1 F2 F3 F4 PP F.F.	—	—	*See performance tables*	— G	— N	80B5 ... 80B14 — / — Look *CT 18* / —	—	— B	— C	— LC LP LF	— A B	— TM	— 100 ...	— US	— ø...	— SIN	M1 M2 M3 M4 M5 M6	1 2 3 4 5 6 7 8

"CRMI 40/85 S1 1/140 63B5 LCB" - CODE: Example of order

CR	MI I	28/28 ... 130/250	S I D A	1 ... 8 1 ... 16	— P FL F1 F2 F3 F4 PP F.F	*See performance tables*	— G	— N	80B5 ... 80B14 — / — Look *CT 18* / —	—	— B ..B B..B	— C	— LC LP LF	— A B	— TM	— 100 ...	— US	— ø...	—	M1 M2 M3 M4 M5 M6	1 2 3 4 5 6 7 8

WEB: Reference Designation

Maschine	Typ Connection	Series	Output Version	Mounting Version	Output Flange	Size	Reduction ratio	IEC type and Input Shaft	Input Version	Input Shaft	*Designation Motors*	Double Extended Input Shaft	Tapered Output Bearings	Limiter Output Version	Limiter Output Motion	Limiter HEAVY Calibration	Limiter Scope of Supply	Type Shaft Diameter	Shaft Diameter	Mounting Position Output Flange	Mounting positions	Position Terminal Box
00 M	01 Tycon	01b Series	03 OV	03a MV	03b OF	02 SIZE	04 IR	05 IECT	06 IV	07 IS		08 BE	09 TOB E	10 LOV	11 LOM	12 LHC	13 LSO S	14 TYP SD	15 SD	16 MPO F	17 MP	19 PMT

"CB /F1 40 1/44.7 56B5 LCB" - CODE: Example of order
"CB R /S 130/101 1/40.4 63B5 LCB" - CODE: Example of order

C	B R	— R	/ Foot — Flange	—	— P FL F1 F2 F3 F4 PP F.F	40 50 70 85 110 130* 150* 180* 215* 250*	*See performance tables*	—	— N	80B5 ... 80B14 — / — Look *CT 18* / —	— B	— C	— LC LP LF	— A B	— TM	— 100 ...	— US	— ø...	— SIN	M1 M2 M3 M4 M5 M6	1 2 3 4 5 6 7 8

*** In gearbox coding there is a transcodifing to identify the size of the coupled EX gearbox.**
130 is 130/101
150 is 150/201
180 is 180/301
215 is 215/501
250 is 250/801

1.2 Designazione — *1.2 Designation* — 1.2 Bezeichnung

01 TYPCON - Tipo connessione — *TYPCON - Type Connection* — TYPCON - Typ Verbindung

RI	RMI	CRI	CRMI	CR	CB	CR	CB

02 SIZE - Grandezza — *SIZE - Size* — SIZE - Größe

RI RMI	28	40	50	63	70	85	110	130	150	180	215	250
CRI CRMI	28/28	28/40 40/40	28/50 40/50	28/63 40/63	28/70 40/70 50/70 63/70	40/85 50/85 63/85 70/85	50/110 63/110 70/110 85/110	63/130 70/130 85/130	85/150 110/150	85/180 110/180 130/180	110/215	130/250
CR CB	—	40	50	—	70	85	110	130	150	180	215	250

03 03a 03b — **RI RMI**

OV - Versione Uscita	*OV - Output Version*	OV - Abtriebausführung
MV - Versione Montaggio	*MV - Mounting Version*	MV - Bauversion
OF - Flangia Uscita	*OF - Output Flange*	OF - Flansche am Abtrieb

S

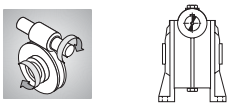

Foot - "upper worm"

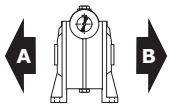

Foot - "upper worm"

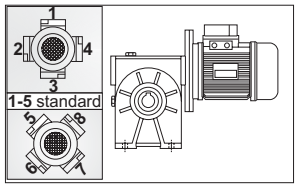

I

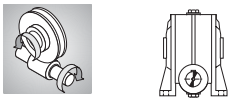

Foot - "lower worm"

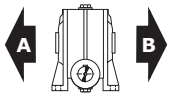

Foot - "lower worm"

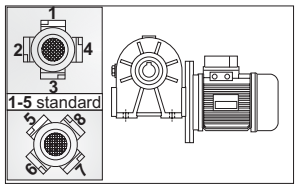

D

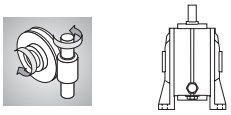

Foot - "lateral worm"

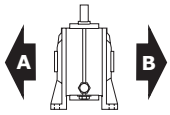

Foot - "lateral worm"

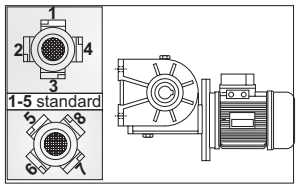

FL F.

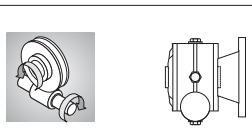

Flange mounted

Left - side Standard
Flange mounted

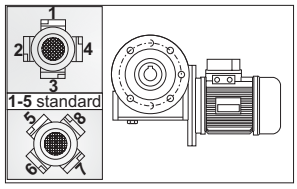

P

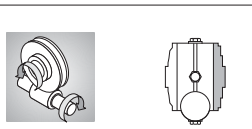

Flange mounted

Left - side Standard
Flange mounted

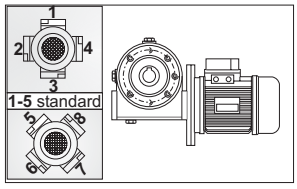

PP F.F.

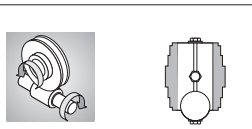

Flange mounted - "Two"

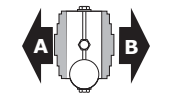

Flange mounted - "Two"

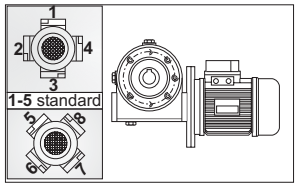

Elenco versioni
Versions
Ausführungen

Il senso dell'elica è destro
The helix is right-hande
Die Schnecke ist rechtsgängig

Lato uscita moto limitatore
Limiter Output Motion
Rutschkupplung-Abtriebsseite

Posizioni della Morsettiera
Position Terminal Box
Montagposition

Klemmenkasten

1.2 Designazione

1.2 Designation

1.2 Bezeichnung

03 03a 03b	**CRI** **CRMI**	OV - Versione Uscita	*OV - Output Version*	OV - Abtriebausführung
		MV - Versione Montaggio	*MV - Mounting Version*	MV - Bauversion
		OF - Flangia Uscita	*OF - Output Flange*	OF - Flansche am Abtrieb

S. Foot "Upper worm"

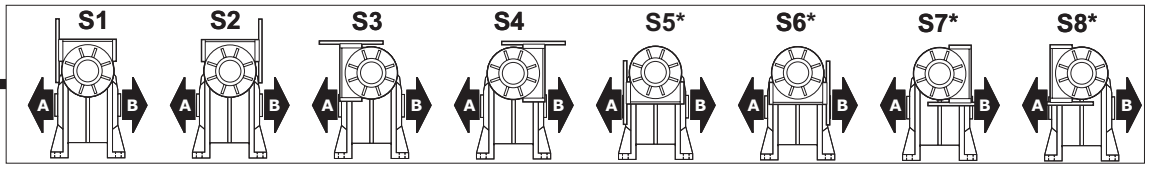

I. Foot "lower worm"

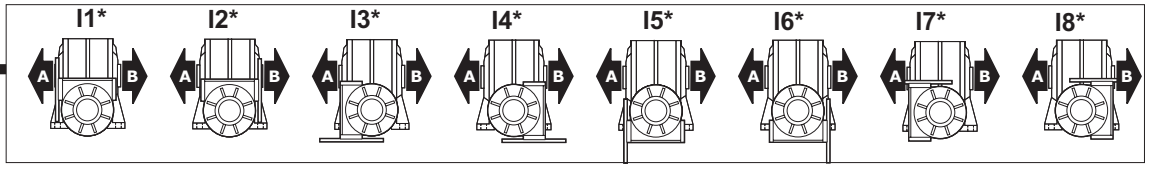

D. Foot "lateral worm"

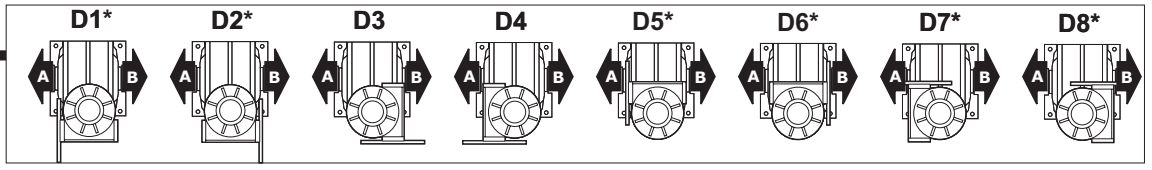

A. FL **F.** Flange Mounted

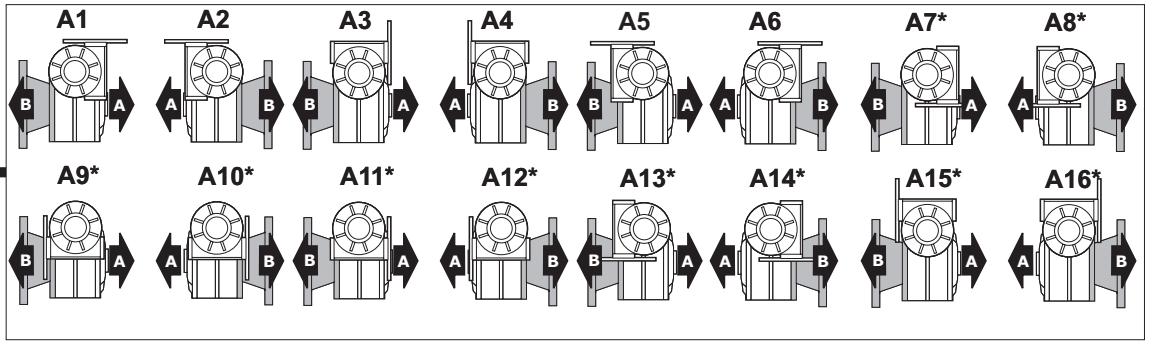

A. P Flange Mounted

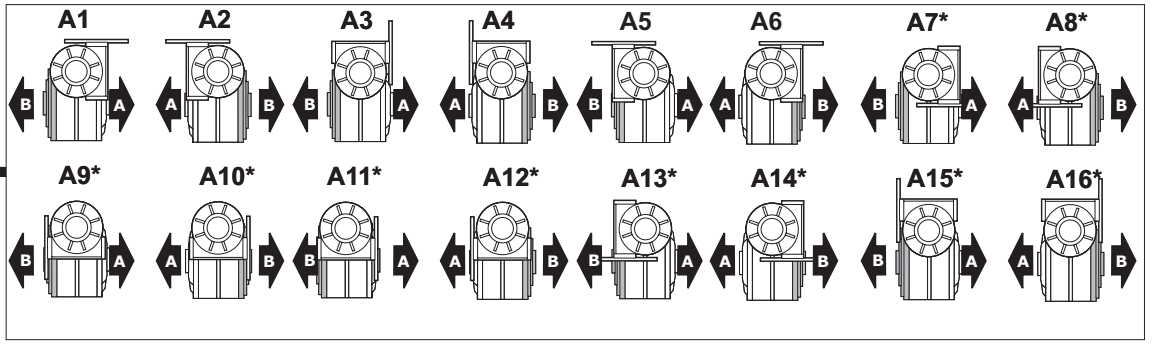

A. F.F. **PP** Flange Mounted-"Two"

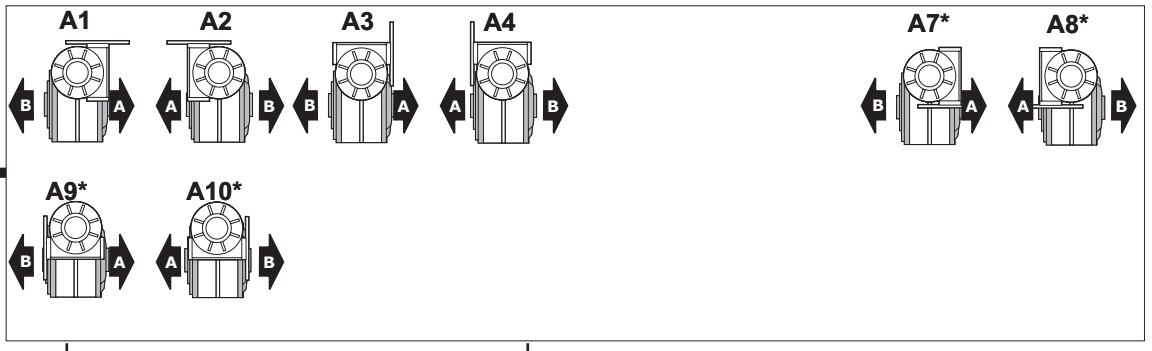

Elenco versioni
Versions
Ausführungen

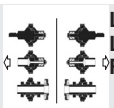

Lato uscita moto limitatore
Limiter Output Motion
Rutschkupplung-Abtriebsseite

(*) Per le versioni contrassegnate chiedere l'applicabilità delle flange B5 e B14 al ns. Servizio tecnico.
(*) When selecting gearboxes please ask our technicians availability of B5 and B14 flanges on the version marked.
(*) Während der Auswahl des Getriebe mit Motorflansch aufgebaut bitte unsere Techniker die Möglichkeit B5/B14 Flansch auf der benötigte Ausführung befragen.

1.2 Designazione / *1.2 Designation* / 1.2 Bezeichnung

03 03a 03b	CRI CRMI	OV - Versione Uscita	*OV - Output Version*	OV - Abtriebausführung
		MV - Versione Montaggio	*MV - Mounting Version*	MV - Bauversion
		OF - Flangia Uscita	*OF - Output Flange*	OF - Flansche am Abtrieb

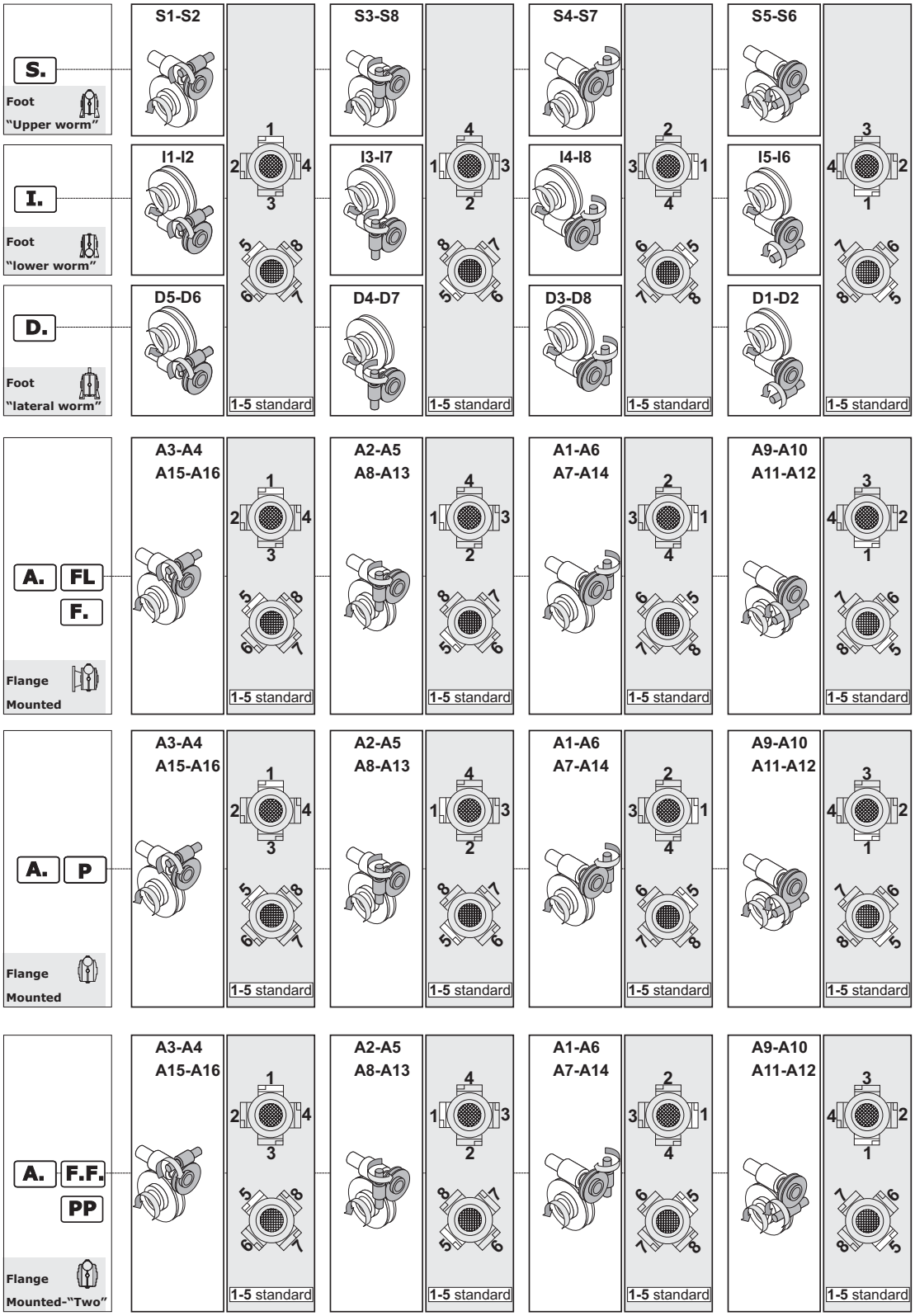

Il senso dell'elica è destro
The helix is right-hande
Die Schnecke ist rechtsgängig

Posizioni della Morsettiera
Position Terminal Box
Montagposition Klemmenkasten

1.2 Designazione | *1.2 Designation* | 1.2 Bezeichnung

03 03a 03b	CB CR	OV - Versione Uscita MV - Versione Montaggio OF - Flangia Uscita	*OV - Output Version* *MV - Mounting Version* *OF - Output Flange*	OV - Abtriebausführung MV - Bauversion OF - Flansche am Abtrieb

40 - 50 - 70 - 85 - 110

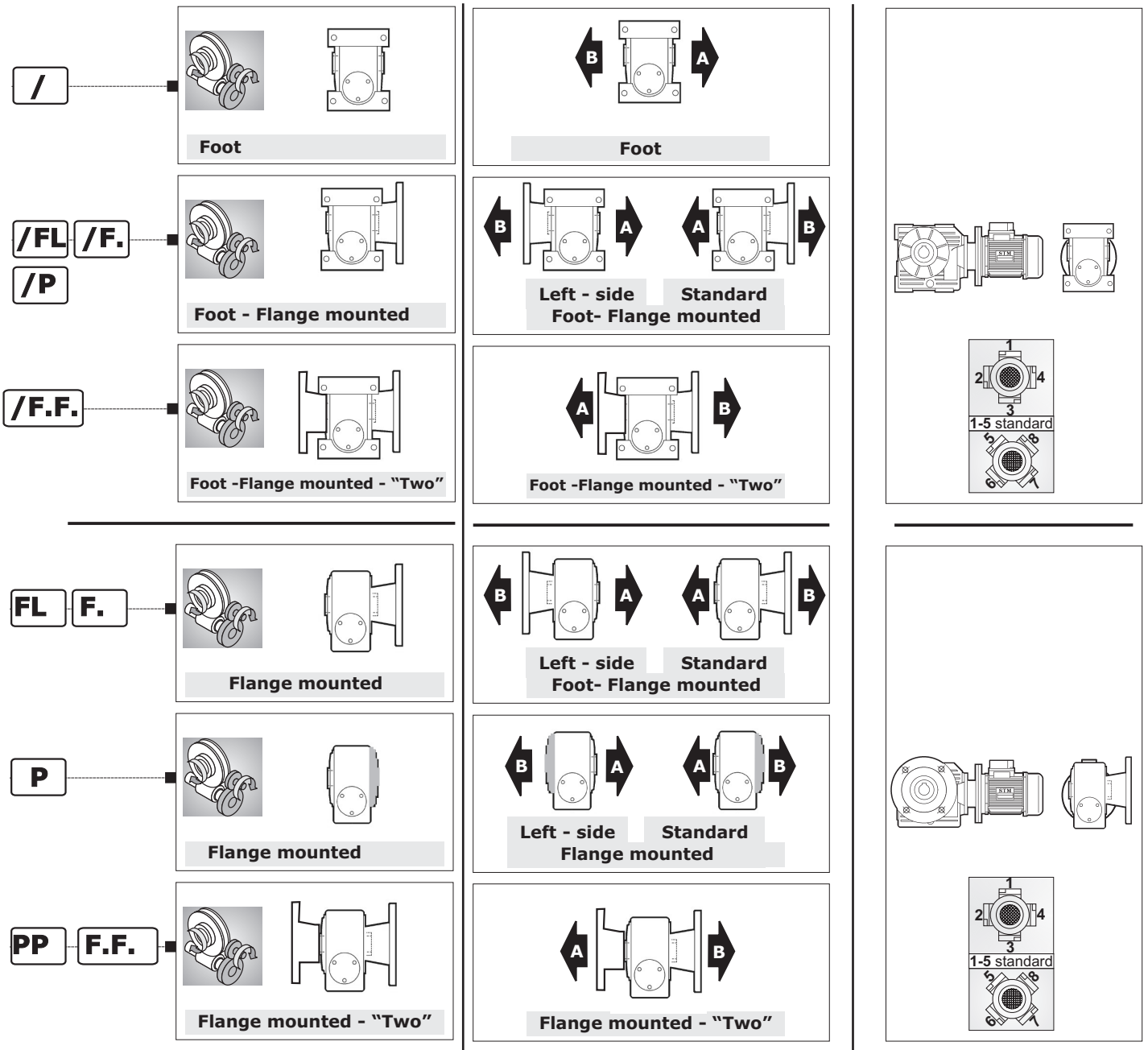

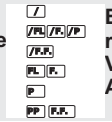

ve n

Elenco rsioni Versions Ausführunge

Il senso dell'elica è destro
The helix is right-hande
Die Schnecke ist rechtsgängig

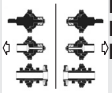

Lato uscita moto limitatore
Limiter Output Motion
Rutschkupplung-Abtriebsseite

Posizioni della Morsettiera
Position Terminal Box
Montagposition
Klemmenkasten

1.2 Designazione | *1.2 Designation* | 1.2 Bezeichnung

03 03a 03b	CB CR	OV - Versione Uscita	*OV - Output Version*	OV - Abtriebausführung
		MV - Versione Montaggio	*MV - Mounting Version*	MV - Bauversion
		OF - Flangia Uscita	*OF - Output Flange*	OF - Flansche am Abtrieb

130 - 150 - 180 - 215 - 250

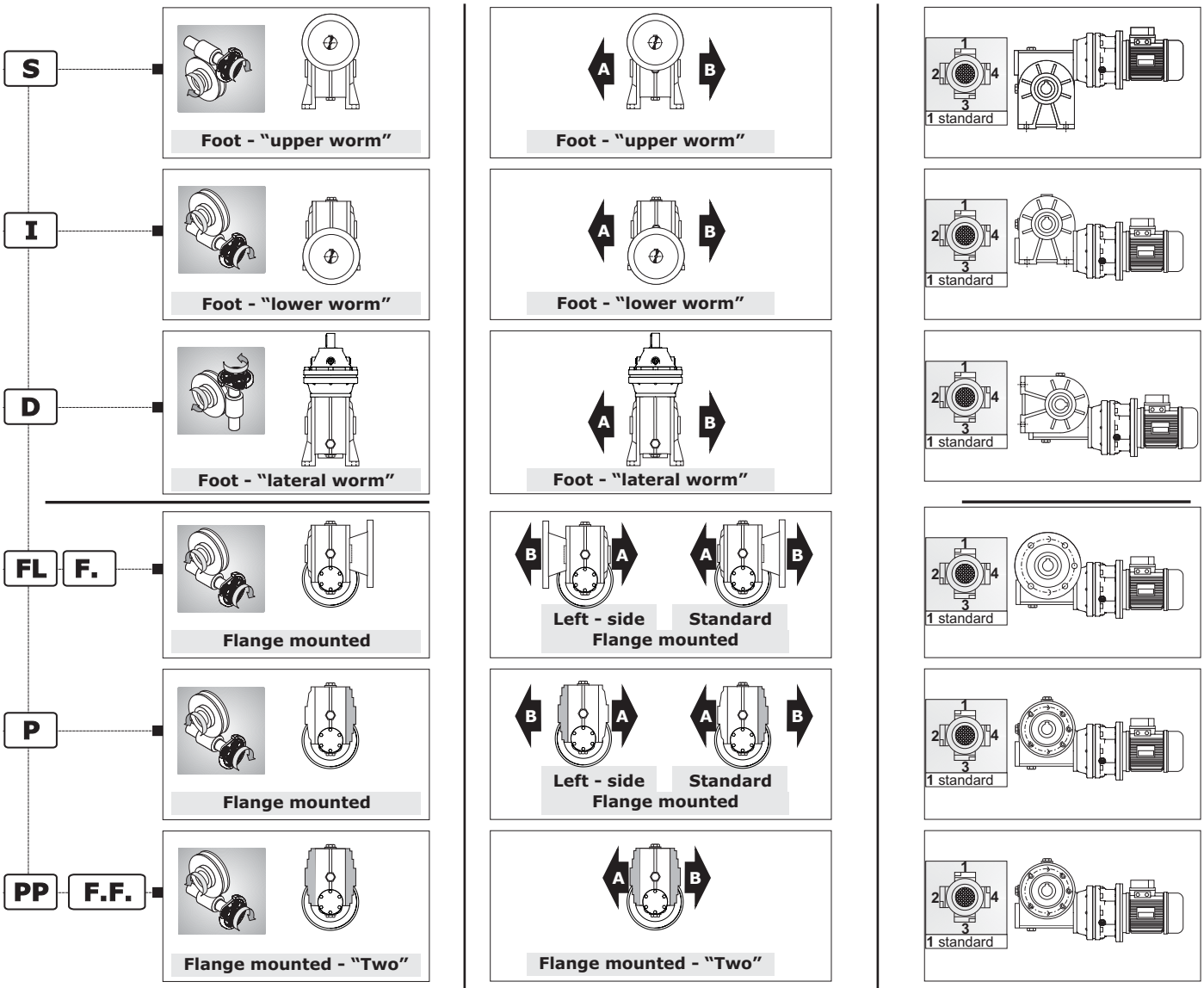

Elenco versioni
Versions
Ausführungen

Il senso dell'elica è destro
The helix is right-hande
Die Schnecke ist rechtsgängig

Lato uscita moto limitatore
Limiter Output Motion
Rutschkupplung-Abtriebsseite

Posizioni della Morsettiera
Position Terminal Box
Montagposition
Klemmenkasten

04 IR- Rapporto di riduzione | *IR - Reduction ratio* | IR - Übersetzungsverhältnis

(Vedi prestazioni). Tutti i valori dei rapporti sono approssimati. Per applicazioni dove necessita il valore esatto consultare il ns. servizio tecnico.

(See ratings). Ratios are approximate values. If you need exact values for a specific application, please contact our Engineering.

(Siehe "Leistungen"). Bei allen Werten der Übersetzungen handelt es sich um approximative Wertangaben. Bei Applikationen, bei denen die exakte Wertangabe erforderlich ist, muss unser Technischer Kundendienst konsultiert werden.

1.2 Designazione

1.2 Designation

1.2 Bezeichnung

05 06 07	RMI CRMI	IECT - Tipo IEC e Albero Entrata	*IECT - IEC type and Input Shaft*	OV - IEC Typ und Antriebswelle
		IV - Versione Entrata	*IV - Input Version*	IV - Antriebausführung
		IS - Albero Entrata	*IS - Input shaft*	IS - Antriebswelle

Possibili accoppiamenti con motori IEC - *Possible couplings with IEC motors* - Mögliche Verbindungen mit IEC-Motoren

					ir - (Rapporto di riduzione / Reduction ratio / Übersetzungsverhältnis)											
					5	7	10	15	20	28	40	49	56	70	80	100
		IECT	IV	IS	—	140	200 280	600	400	—	—	980 1372 1960	—	2800	—	4000 5600 7000 8000 10000
28	28/28-28/40-28/50 -28/63-28/70	—	—	63	—	**11/90** (B14)										
				56	—	**9/120** (B5) - **9/80•** (B14)										
40	40/40-40/50-40/63 -40/70-40/85	G	—	71	**14/160** (B5) **- 14/105** (B14) **-** 14/140 - 14/120 - 14/90•											
				63	**11/140** (B5) **- 11/90•** (B14) **-** 11/160 - 11/120 - 11/105											
				56	**9/120** (B5) **- 9/160 -** 9/140 - 9/105 - 9/90•											
50	50/70-50/85 50/110	G	—	80	**19/120** (B14) **- 19/200** (B5) - 19/160 - 19/140 - 19/105• - 19/90•											
				71	**14/160** (B5) **- 14/105•** (B14) - 14/200 - 14/140 - 14/120 - 14/90•											
				63	**11/140 (B5) - 11/90•** (B14) - 11/200 - 11/160 - 11/120 - 11/105•											
63	63/70-63/85 63/110-63/130	G	—	90	**24/200** (B5) **- 24/140** (B14) - 24/160 - 24/120 - 24/105•											
				80	**19/200** (B5) - **19/120** (B14) - 19/160 - 19/140 - 19/105•											
				71	**14/160** (B5) - **14/105•** (B14) - 14/200 - 14/140 - 14/120											
70	70/85-70/110 70/130	—	—	100 (3)	—	**28/160** (B14)										
				90	—	**24/200** (B5) **-24/140** (B14) 24/160-24/120 -24/105•										
				80	—	**19/200** (B5) - **19/120** (B14) 19/160 - 19/140 - 19/105•										
				71 (1)	—						**14/160** (B5)-**14/105•** (B14) 14/200-14/140-14/120					
85	85/110-85/130 85/150-85/180	—	—	100	—	**28/250** (B5) - **28/160** (B14) 28/200 - 28/140										
				90	—	**24/200** (B5) **- 24/140** (B14) 24/250 - 24/160 - 24/120•										
				80 (1)	—						**19/200** (B5)-**19/120•** B14 19/250-19/160-19/140					
110	110/150-110/180 110/215	—	—	132 (2)(4)	—	**38/300** (B5)										
				112	—	**28/250** (B5) - **28/160** (B14) 28/200 - 28/140										
				100	—	**28/250** (B5) - **28/160** (B14) 28/200 - 28/140										
				90 (1)	—						**24/200** (B5) - **24/140** (B14) 24/250 - 24/160					
130	130/180-130/250	—	—	132	—	**38/300** (B5)										
				112	—	**28/250** (B5) 28/200										
				100	—	**28/250** (B5) 28/200										
150	—	—	—	160	—	**42/350** (B5)										
				132	—	**38/300** (B5) 38/350 - 38/250 - 38/200										
				112 (1)	—	**28/250** (B5) 28/350 - 28/300 - 28/200										
				100 (1)	—	**28/250** (B5) 28/350 - 28/300 - 28/200										
180	—	—	—	180	—	**48/350** (B5)										
				160	—	**42/350** (B5) 42/300 - 42/250										
				132	—	**38/300** (B5) 38/350 - 38/250										
215 250	—	—	—	225	—	**60/450** (B5)										
				200	—	**55/400** (B5)										
				180	—	**48/350** (B5)										
				160	—	**42/350** (B5)										
				132	—	**38/300** (B5)										

(1) I riduttori con vite bisporgente vengono realizzati con boccola di riduzione in acciaio (es. per 110 boccola riduzione ø 28/24).

N.B.
Per le grandezze 40, 50, 63 sono possibili solo queste configurazioni:
La bisporgenza è realizzata solo con giunto;

(2) Versione F2 - Non disponibile

(3) Si sconsiglia di montare i riduttori nelle posizioni di montaggio 03 e 04.

(4) **ATTENZIONE!**
(Vedere Paragrafo 1.12).

(1) The and worm gearboxes with double extended input shaft have a steel axle box (e.g. for 110 axle box ø 28/24).

N.B.
These are the only configurations possible for sizes 40, 50, 63
The double extension is made by using a coupling;

(2) Version F2 not available.

(3) We advise you to mount the speed reducer in the positions 03 or 04.

(4) ***WARNING!***
(Look at chapter 1.12).

(1) Getriebe mit beidseitiger Antriebswelle haben eine Stahl-Reduziermuffe (z.B. 110 Muffe 28/24)

Hinweis:
Für die Größen 40, 50, 63 sind nur diese Konfigurationen möglich:
Das doppelte Wellenende wurde nur mit Kupplung hergestellt;

(2) Ausführung F2 - Nicht erhältlich

(3) Wir abraten die Getriebe in position Nummer 03 oder 04 zu montieren.

(4) **ACHTUNG!**
(s. S. 1.12).

1.2 Designazione / *1.2 Designation* / 1.2 Bezeichnung

05 06 07	**CB**	IECT - Tipo IEC e Albero Entrata	*IECT - IEC type and Input Shaft*	OV - IEC Typ und Antriebswelle
		IV - Versione Entrata	*IV - Input Version*	IV - Antriebausführung
		IS - Albero Entrata	*IS - Input shaft*	IS - Antriebswelle

40 - 50 - 70 - 85 - 110

130 - 150 - 180 - 215 - 250

Possibili accoppiamenti con motori IEC - *Possible couplings with IEC motors* - Mögliche Verbindungen mit IEC-Motoren

Size	IECT	IV	IS	ir Tutti / *All* / Alle
40	—	—	63	**11/140** (B5) - **11/90** • (B14) 11/120 - 11/80
			56	**9/120** (B5) - **9/80** (B14) 9/140
50	—	—	71	**14/160** (B5) 14/140
			63	**11/140** (B5) - **11/90** • (B14) 11/160
			56	**9/120** (B5) - **9/80** • (B14) 9/160 - 9/140
70	—	—	90	**24/200** (B5)
			80	**19/200** (B5) 19/160
			71	**14/160** (B5) 14/140
			63	**11/140** (B5) 11/160
85	—	—	90	**24/200** (B5) 24/160
			80	**19/200** (B5) 19/160
			71	**14/160** (B5) 14/140
			63	**11/140** (B5) 11/160
110	—	—	112	**28/250** (B5)
			100	**28/250** (B5)
			90	**24/200** (B5)
			80	**19/200** (B5)

Size	IECT	IV	IS	ir Tutti / *All* / Alle
130 150	—	—	180	**48/350** (B5)
			160	**42/350** (B5)
			132	**38/300** (B5)
			112	**28/250** (B5)
			100	**28/250** (B5)
			90	**24/200** (B5)
			80	**19/200** (B5)
			71	**14/160** (B5)
			63	**11/140** (B5)
180 215	—	—	225	**60/450** (B5)
			200	**55/400** (B5)
			180	**48/350** (B5)
			160	**42/350** (B5)
			132	**38/300** (B5)
			112	**28/250** (B5)
			100	**28/250** (B5)
			90	**24/200** (B5)
			80	**14/160** (B5)
			71	**11/140** (B5)
			63	**9/120** (B5)
250	—	—	280	**75/550** (B5)
			250	**65/550** (B5)
			225	**60/450** (B5)
			200	**55/400** (B5)
			180	**48/350** (B5)
			160	**42/350** (B5)
			132	**38/300** (B5)
			112	**28/250** (B5)
			100	**28/250** (B5)
			90	**24/200** (B5)
			80	**19/200** (B5)
			71	**14/160** (B5)
			63	**11/140** (B5)

Nella tab. sono riportate le grandezze motore accoppiabili (IEC) unitamente alle dimensioni albero/flangia motore standard
Legenda:
11/140 (B5): combinazioni albero/flangia standard
11/120 : combinazioni albero/flangia a richiesta

In table the possible shaft/flange dimensions IEC standard are listed.
Key:
11/140 *: standard shaft/flange combination*
11/120 : shaft/flange combinations upon request

In Tabelle sind die möglichen Welle/Flansch- Abmessungen IEC-Standard aufgelistet.
Legende:
11/140 : Standardkombinationen Welle/Flansch
11/120 : Sonderkombinationen Welle/Flansch

IECT	—	Accoppiamento diretto / *Direct coupling /* Direkte Passung
	G	Accoppiamento con Giunto / *Direct with coupling /* Direkte mit Kupplung
IV	—	Predisposto per accoppiamento con Unità Motrice IEC / *pre arrangement motor IEC /* geeignet für die Kombination mit Antriebseinheit IEC
	N	A richiesta / on Request / Auf Anfrage Predisposto per accoppiamento con Unità Motrice NEMA/ *pre arrangement motor NEMA /* geeignet für die Kombination mit Antriebseinheit NEMA - **CT 36 US GB**
IS	**...**	Grandezza IEC / *Size IEC /*

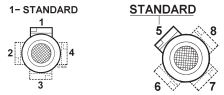

Posizione morsettiera - Vedere - 19 - PMT - Pagina B15
Terminal board position - Look - 19 - PMT - Page B15
Lage des Klemmenkastens - Siehe - 19 - PMT - Auf Seite B15

Designazione motore elettrico Se è richiesto un motoriduttore completo di motore è necessario riportare la designazione di quest'ultimo. A tale proposito consultare il ns. catalogo dei motori elettrici Electronic Line.	*Electric motor designation* *For applications requiring a gearmotor, motor designation must be specified.To this end, please refer to our Electronic Line electric motor catalogue.*	Bezeichnung des Elektromotors Wird ein Getriebemotor komplett mit Elektromotor angefordert, müssen dessen Daten angegeben werden. Diesbezüglich verweisen wir auf unseren Katalog der Elektromotoren "Electronic Line".

1.2 Designazione

1.2 Designation

1.2 Bezeichnung

05 06 07	RI CRI CR	IECT - Tipo IEC e Albero Entrata	*IECT - IEC type and Input Shaft*	OV - IEC Typ und Antriebswelle
		IV - Versione Entrata	*IV - Input Version*	IV - Antriebausführung
		IS - Albero Entrata	*IS - Input shaft*	IS - Antriebswelle

— Nessuna indicazione = diametro standard;

— No indications = standard diameter;

— Keine Angabe = Standard-durchmesser

RI	28	40	50	63	70	85	110	130	150	180	215	250
	(∅ 9)	(∅ 11)	(∅ 14)	(∅ 18)	(∅ 19)	(∅ 24)	(∅ 28)	(∅ 38)	(∅ 42)	(∅ 48)	(∅ 48)	(∅ 55)

CRI	28/28 28/40 28/50 28/63 28/70	40/40 40/50 40/63 40/70 40/85	50/70 50/85 50/110	63/70 63/85 63/110 63/130	70/85 70/110 70/130	85/110 85/130 85/150 85/180	110/150 110/180 110/215	130/180 130/250	—	—	—	—
	(∅ 9)	(∅ 11)	(∅ 14)	(∅ 18)	(∅ 19)	(∅ 24)	(∅ 28)	(∅ 38)	—	—	—	—

CR	—	40	50	—	70	85	110	130	150	180	215	250
	—	(∅ 14)	(∅ 19)	—	(∅ 24)	(∅ 28)	(∅ 32)	(∅ 38)	(∅ 38)	(∅ 48)	(∅ 48)	(∅ 65)

08 BE - Bisporgenza Entrata

1)RI-RMI - CR-CB

— Nessuna indicazione = vite senza bisporgenza;
B = vite con bisporgenza.

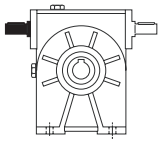

2)CRI-CRMI

— Nessuna indicazione = vite senza bisporgenza;
2.1 - B
CRI28/50..B - Bisporgenza 2°
2.2 - ...B
CRI28/50..28B-Bisporgenza 1°
2.3 - B...B
CRI28/50..B28 B - Bisporgenza 1° e 2°.

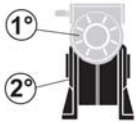

N.B.
Vedere note pagina B10.

BE - Input double extension

1)RI-RMI - CR CB

— No indications = input shaft without double extension;
***B** = double extended input shaft.*

2)CRI-CRMI

— No indications = input shaft without doubleextension;
2.1 - B
***CRI28/50..B**-Double Extension 2°*
***2.2 -...B**:*
***CRI28/50.28B**-Double Extension 1°*
***2.3 - B...B**:*
***CRI28/50..B28 B**-Double Extension 1° and 2°.*

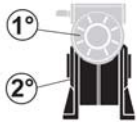

N.B.
Please see notes page B10

BE - Doppelte vorstehende Antriebswelle

1)RI-RMI - CR-CB

— Keine Angabe = Schnecken ohne doppeltes Wellenende
B = Schnecke mit doppeltem Wellenende

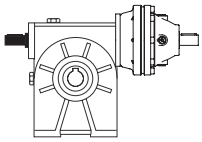

2)CRI-CRMI

— Keine Angabe = Schnecke ohne doppeltes Wellenende
2.1 - B
CRI28/50..B 2°
2.2 - ...B
CRI28/50..28B 1°
2.3- B.. B
CRI28/50..B28 B 1° und 2°

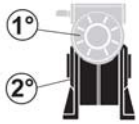

Zu beachten sind bitte die Hinweise auf Seite B10.

09 TOBE - Cuscinetti Conici Uscita

— Nessuna indicazione = Cuscinetti Uscita del tipo radiale a una corona di sfere;

C = Cuscinetti conici in uscita.

N.B. Per Le versioni con limitatore di coppia questa opzione non è disponibile

TOBE - Tapered Output Bearings

— No indications = Output Radial Ball Bearing

***C** = Tapered output bearings.*

***N.B.** For the versions using limiters*

TOBE - Abtriebskegellager

— Keine Angabe = Abtriebslager vom Typ Radial-Kugellager;

C = Ausgangskegellager.

Hinweis: Für die Ausführung mit Drehzahlbegrenzer

1.2 Designazione

10 LOV - Versione Limitatore

Alla designazione del riduttore, determinata reperendo i dati necessari nei rispettivi cataloghi, deve seguire la lettera **L** che contraddistingue il limitatore incorporato, unitamente alla versione desiderata:

1.2 Designation

LOV - Limiter Output Version

*Once the right designation of the gearbox has been selected following the indications reported in the respective catalogues, letter **L** must be added to indicate the built-in limiter together with the required version:*

1.2 Bezeichnung

LOV - Rutschkupplung-Ausführung

Nach der Wahl des Getriebetyps (basie- rend auf den im jeweiligen Katalogab- schnitt zu findenden Angaben) wird der Getriebespezifikation bei Bedarf einer Rut- schkupplung der Buchstabe **L** hinzugefügt. Der Typ der Rutschkupplung muß folgen- dermaßen gekennzeichnet werden:

LP		**albero sporgente**	***double extended shaft***	**Vollwelle**
LC		**albero cavo non passante**	***hollow shaft***	**einseitig Hohlwelle**
LF	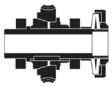	**albero cavo passante**	***through hollow shaft***	**durchgehend Hohlwelle**

11 LOM - Lato uscita moto limitatore

LOM - Limiter Output Motion

LOM - Rutschkupplung-Abtriebsseite

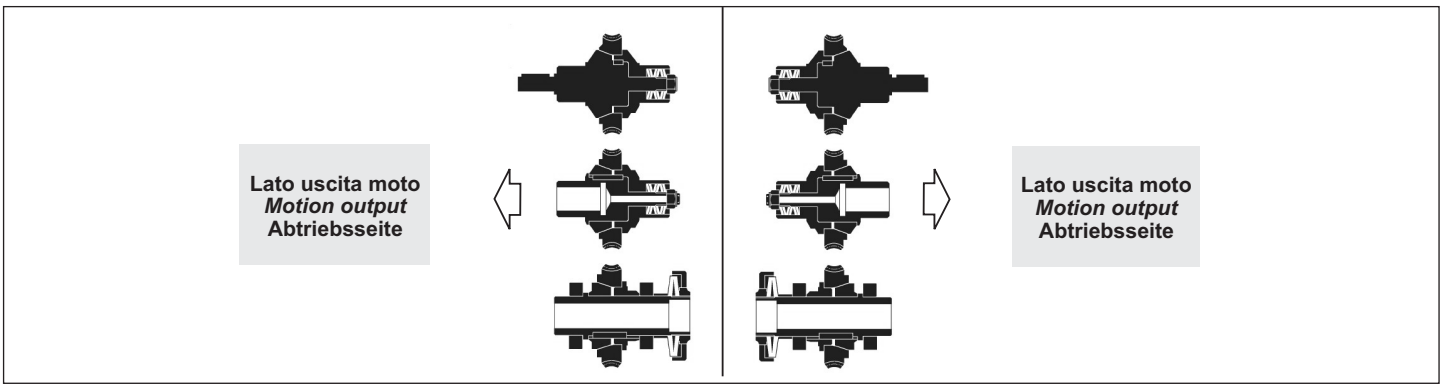

E' molto importante precisare anche il lato dove si desidera l'uscita del moto **A, B,** avvalendosi degli schemi riportati nelle pagine **A 5-6-7-8-9** , ricordando che, ovviamen te, dalla parte opposta dell'uscita sarà possibile effettuare la taratura del limitatore agendo sull'apposito dado o ghiera.

Per la determinazione della posizione dell' al bero di uscita nelle versioni a piedi o PP, è sufficiente osservare il riduttore dalla parte entrata moto o (per la versione di montaggio **D**) lato vite ; se l'albero è desiderato sul lato sinistro, la posizione di montaggio del limitatore sarà in esecuzione **A**, viceversa, se l' albero è a destra si dovrà richiedere l'esecuzione **B**.

Nelle versioni FL o P, l'esecuzione A è considerata quella che prevede l'uscita- moto dal lato del coperchio chiuso o coperchio F0 (lato opposto alla flangia); l'esecuzione B è invece quella in cui l'uscita-moto è dalla stessa parte della flangia FL o P.

A tale proposito si desidera evidenziare che nelle versioni FL è stata riportata l'esecuzione dell'albero di uscita tipo "A".
Anche se tecnicamente fattibile, la ghiera o il dado si trovano all'interno della flangia stessa, pertanto difficilmente accessibili.

N.B. La scelta della posiz. A e B dell' albero uscita è dipendente dalla versione di montaggio del riduttore.

*It is also essential to specify where the output of motion **A** and **B** is required according to the diagram shown in the page **A 5-6-7-8-9** , reminding that on the opposite side of the output it is possible to carry out the limiter calibration by acting on to the appropriate nut or ring nut.*

*In order to determine the position of the output shaft in foot or PP version, it is enough to look at the gearbox from the input side or wormshaft side (mounting position **D**), if shaft is required on to the left hand side, mounting position of limiter will be **A**, on the contrary, if shaft is required on to the right hand side, version **B** should be required.*

In the FL or P versions, execution A is the one that provides the output of motion from the closed cover or F0 cover (on the opposite side of the flange); execution B, instead, is the one that provides the output of motion from FL or P side.

In this context please note that in the version FL the output shaft is executed with type "A". Even if technically possible, washers or nuts are in the flange itself and these are hard to reach.

NOTE. Choice of shaft positions A and B are related to mounting position of gearbox.

Außerdem muß die Abtriebsseite **A**, **B** mit Hilfe der anschließend aufgeführten Skizzen **A 5-6-7-8-9** angegeben werden - unter Berücksichtigung, daß die Einstellmutter sich auf der dem Abtrieb gegenüberlie- genden Seite befindet .

Zur Bestimmung der Lage der Abtrieb- swelle wird ein Getriebe in Fußversion oder Version PP von der Eingangsseite oder (bei der Montageversion **D**) von der Schraubenseite betrachtet: befindet sich die Welle auf der linken Seite, ist die Montagestellung des Drehmomentbegrenzers Ausführung **A**, andernfalls - wenn die Welle sich auf der rechten Seite befindet-handelt es sich um Ausführung **B.**

Bei den Versionen in einfacher P- oder Flanschausfuhrung ist zu beachten, daß bei der Ausführung A der Abtrieb auf der Seite des geschlossenen oder F0-Deckels (gegen- über dem Flansch), liegt folglich befindet sich die Einstellmutter dann im Flansch.

In diesem Zusammenhang wird darauf hingewiesen, dass in der Version FL die Ausgangswelle mit Typ "A" ausgeführt wird.
Auch wenn technisch möglich, sind Unterlegscheiben oder Muttern im Flansch selbst zu finden und daher schwer zu erreichen.

HINWEIS. Die Wahl der Abtriebsposition A oder B ist abhängig von der Montageposition des Getriebes.

1.2 Designazione

12 LHC - Taratura maggiorata limitatore

— Nessuna indicazione = Senza taratura maggiorata;
Disponibile - RI-RMI;

TM = Taratura maggiorata
Disponibile - RI-RMI - CRI-CRMI - CR-CB

13 LSOS - Stato fornitura limitatore

— Nessuna indicazione = Se non specificato il limitatore è fornito NON TARATO.

... = A richiesta è possibile fornire il limitatore tarato con un valore specifico della coppia di slittamento M_{2S} .

Nelle tabelle delle prestazioni sono riportate le coppie di slittamento M_{2S} in funzione del numero dei giri del dado, o della ghiera di regolazione ottenibili con la disposizione standard delle molle.

Altrimenti è possibile accordarsi con nostro Ufficio Commerciale per un valore di taratura specifico.

14 TYPSD - Tipo Albero uscita

— Nessuna indicazione = le dimensioni dell' albero sono secondo il sistema di misura SI (mm);

US = a richiesta
è possibile richiedere alberi con le dimensioni secondo il sistema di misura US (inch).
CT 36 US GB

15 SD - Diametro Albero

Diametro albero:
— Nessuna indicazione = diametro foro standard;
diametro foro opzionale = (vedi tabella).

1.2 Designation

LHC - Limiter HEAVY Calibration

— *No indications = Without HEAVY Calibration;*
Available - RI-RMI

TM = HEAVY Calibration
Available - RI-RMI - CRI-CRMI - CR-CB

LSOS - Limiter-Scope of the supply

— *No indications = If not specified in detail, the limiter is supplied without calibration.*

On request it is possible to provide the limiter with a calibrated slipping torque M2S:

In the following tables the slipping torques M_{2S} are listed according to number of turns of nut or ring nut obtainable with a standard arrangement of the springs.

Otherwise is possible to agree specific setting value with our Sales Dept. .

TYPSD - Typ output shaft

— *No indications = The shaft dimensions are subject to the system of units SI (mm).*

US = On request
It's possible to request shafts dimensions according US measurement system (inch).

CT 36 US GB

SD - Shaft diameter

Shaft Diameter:
— No indications = standard hole diameter;

optional hole diameter *= (see table).*

1.2 Bezeichnung

LHC - Rutschkupplung-Erhöhtes Ansprechmoment

— Keine Angabe = Ohne Erhöhtes Ansprechmoment;
Verfügbar - RI-RMI;

TM = Erhöhtes Ansprechmoment
Verfügbar - RI-RMI - CRI-CRMI - CR-CB

LSOS - Rutschkupplung-Lieferzustand

— Keine Angabe = Wenn nicht detailliert angegeben, wird der Begrenzer ohne Kalibrierung geliefert

Auf Anfrage ist es möglich, den Begrenzer mit einem kalibrierten Rutschmoment M2S zu liefern.

In der folgenden Tabelle sind die Rutsch-momente M_{2S} dargestellt, wie sie je nach Stellung der Sechskant- oder Nutmutter mit der Standardanordnung der Tellerfedern erreicht werden.

Es ist außerdem möglich mit unserer Verkaufsabteilung einen bestimmten Eichwert festzusetzen.

TYPSD - Typ Abtriebwelle

— Keine Angabe = Die Wellendimensionen unterliegen dem Einheitensystem SI (mm)

US = Auf Anfrage
es ist möglich Wellen anzuforden, die den amerikanischen Abmessungen (inch) entsprechen.
CT 36 US GB

SD - Durchmesser Abtirebswelle

Wellendurchmesser:
— Keine Angabe = Standard-Bohrungsdurchmesser
Optionaler Bohrungsdurchmesser = (siehe Tabelle).

RI - RMI	28	40	50	63	70	85	110	130	150	180	215	250
CRI - CRMI	28/28	28/40 40/40	28/50 40/50	28/63 40/63	28/70 40/70 50/70 63/70	40/85 50/85 63/85 70/85	50/110 63/110 70/110 85/110	63/130 70/130 85/130	85/150 110/150	85/180 110/180 130/180	110/215	130/250
CR - CB	—	40	50	—	70	85	110	130	150	180	215	250
Standard (mm)	14	19	24	25	28	32	42	48	55	65	90	110
Optional (mm)	—	(18)	(25)	—	—	(35)	—	—	—	—	—	—

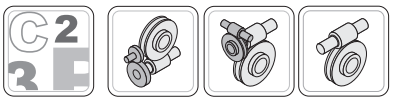

1.2 Designazione

16 MPOF - Lato Flangia Uscita

— Nessuna indicazione = flangia uscita con montaggio destro;

SIN = flange uscita con montaggio sinistro.

1.2 Designation

MPOF - Mounting Position Output

— No indication (standard) = output flange on right side;

***SIN** = output flange on left side.*

1.2 Bezeichnung

MPOF - Montageseite Abtiebsflansch

— Keine Angabe (Standard) = Abtriebs- flansch rechts;

SIN = Abtriebsflansch links.

RI-RMI

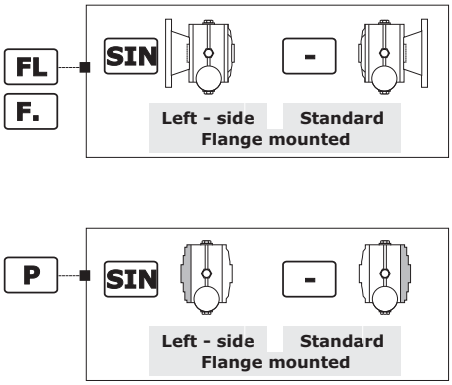

CRI-CRMI

— Fare riferimento ai campi 3 - 3a - 3b
— Reference fields 3 - 3a - 3b
— Referenzfelder 3 - 3a - 3b

CR-CB 40-50-70-85-110

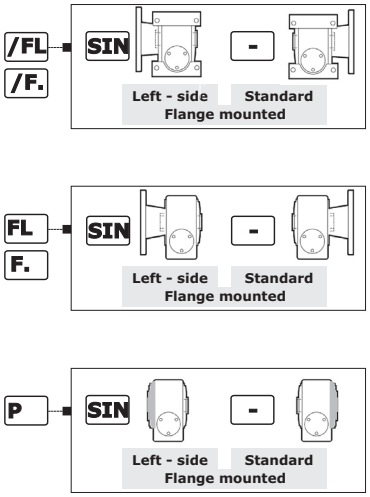

CR-CB - 130-150-180-215-250

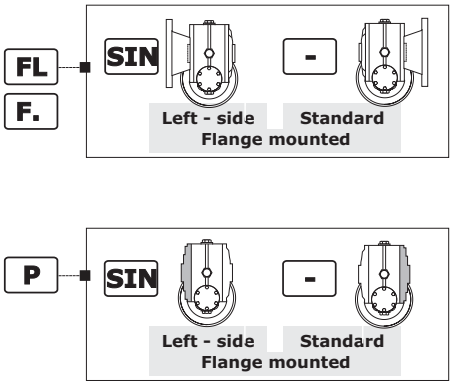

B

17 MP - Posizioni di montaggio

[M2, M3, M4, M5, M6] Posizioni di montaggio con indicazione dei tappi di livello, carico e scarico; se non specificato si considera standard la posizione **M1** (vedi par. 1.4)

MP - Mounting positions

***[M2, M3, M4, M5, M6]** Mounting position with indication of breatherm level and drain plugs; if not specified, standard position is **M1** (see par. 1.4).*

MP - Einbaulagen

Montageposition **[M2, M3, M4, M5, M6]** mit Angabe von . Entlüftung, Schaugläsern und Ablaßschraube. Wenn nicht näher spezifiziert, wird die Standard - position **M1** zugrunde gelegt (s. Abschnitt 1.4).

18 OPT-ACC. - Opzioni

OPT-ACC - Options

OPT-ACC. - Optionen

vedi par. 1.9 see pa. 1.9 s. Abschnitt 1.9	ACC1	AL	Alberi lenti - AL	Output shafts - AL	Abtriebswellen - AL
		AL_BU	Alberi lenti Bisporgenti - AL_BU	Double Output shafts - AL_BU	Beidseitige Abtriebswellen - AL_BU
		PROT.	Coperchio di protezione	Protection cover	Schultzvorrichtungdeckel
	ACC3	BRS	Braccio Reazione Semplice	Torque arm - Single	Drehmomentstütze - Normal
		BRS_VKL	Braccio Reazione Semplice_con boccola_VKL	Torque arm - Single_with VKL_bushing	Drehmomentstütze - Normal_mit VKL - Buchse
	ACC9	ELSX	Vite senza fine - Elica Sinistra	Worm Geraboxe - Left helix	Linksgängige Schraubenlinie der Schneke
vedi Sezione A-1.12 see Section A-1.12 s. Abschnitt A-1.12	OPT.	OPT	Materiale degli anelli di tenuta	Materials of Seals	Dichtungsstoffe
		OPT1	Stato fornitura olio	Scope of the supply - Options - OIL	Optionen - Lieferzustand - Optionen - Öl
		OPT2	Verniciatura	Painting and surface protection	Lackierung und Oberflächenschutzl

19 PMT - Posizioni della Morsettiera

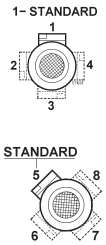

[2, 3, 4] Posizione della morsettiera del motore se diversa da quella standard (1).

N.B.
La configurazione standard della flangia at- tacco motore prevede 4 fori a 45°.

Per le flange contrassegnate con il simbolo (•) (**vedi pagina B10)** i fori per il fissaggio al motore sono disposti in croce (esempio +). Pertanto è opportuno valutare l'ingombro della morsettiera del motore che verrà installato in quanto essa verrà a trovarsi orientata a 45° rispetto agli assi. Per la scelta della posizione della morsettiera rispetto agli assi fare riferimento allo schema seguente (in cui la posizione 5 è quella standard):

PMT - Position Terminal Box

***[2, 3, 4]** Position of the motor terminal box if different from the standard one (1).*

Note.
The standard configuration for the 4 holes is 45° to the axles (like an x: see par 2.3).

*For the flanges marked with (•) (**see page B10)** the holes to fit the motor are on the axles (like a +). Therefore we suggest to check the dimensions of the terminal board of the motor as it will be at 45° to the axles. Please choose the terminal board position refering to the following sketch (in which n° 5 is the standard position):*

PMT - Montagposition Klemmenkasten

Montageposition Klemmenkasten **[2, 3, 4],** wenn abweichend von Standardposition [1] (für Motorgetriebe).

HINWEIS.
In der Standardkonfiguration sind die 4 Flansch- bohrungen im 45°-Winkel zu den Achsen angeordnet
Bei Flanschen, die mit (•) (**Siehe auf Seite B10)** gekennzeichnet sind, sind die Bohrungen auf den Achsen angeord- net (wie ein +). Es sollte deshalb der Platzbedarf des Motorklemmenkastens beachtet werden, da er sich in 45°-Position zu den Achsen befinden wird. Die Lage des Klemmenkastens des Motors wählen Sie bitte anhand der folgenden Skizze (Pos. 5 ist Standardposition):

1.4 Lubrificazione

1.4 Lubrication

1.4 Schmierung

Posizioni di montaggio
Mounting positions
Montagepositionen

RI - RMI

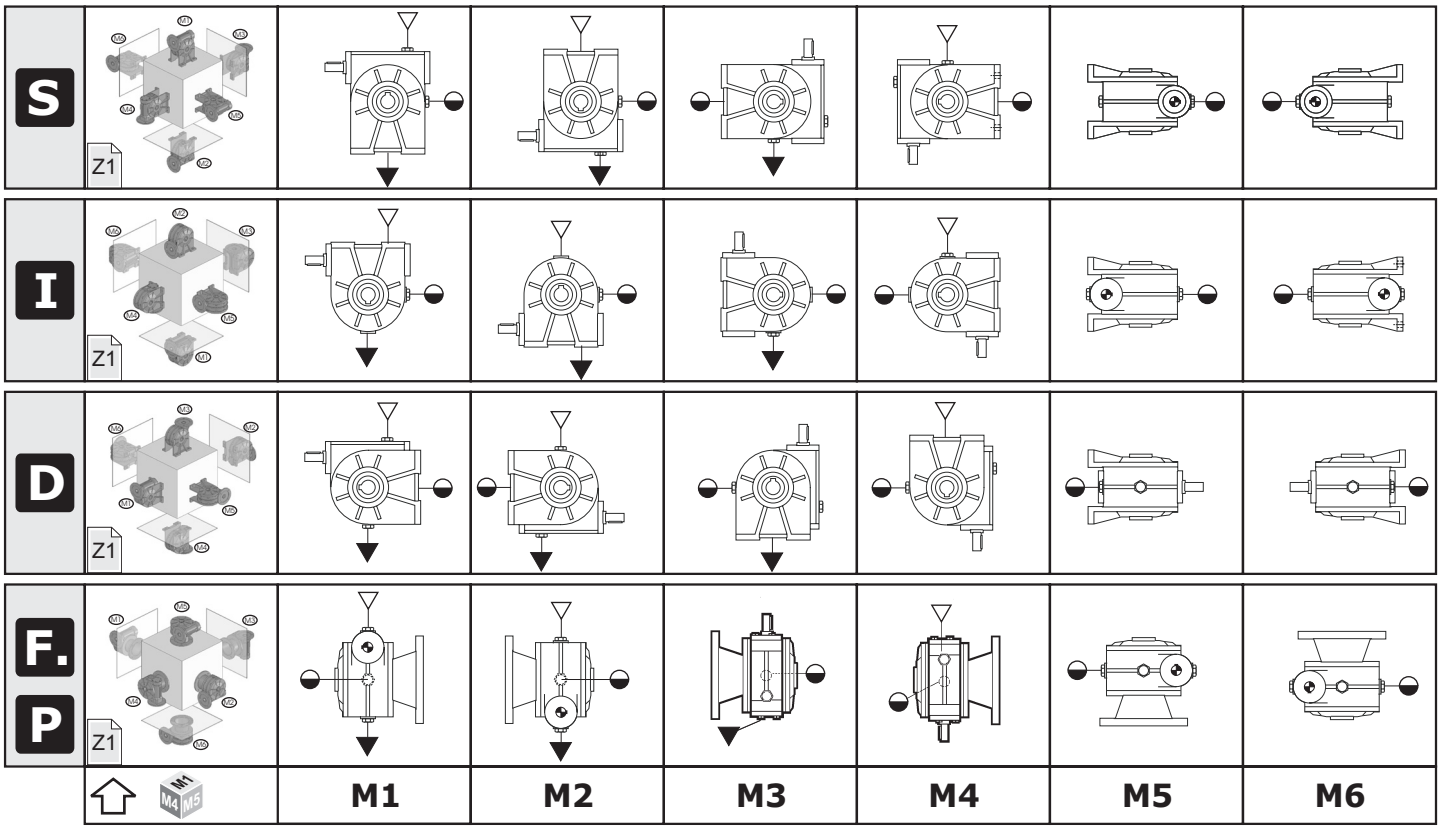

▽ Carico / *Breather plug* / Nachfüllen - Entlüftung
◒ Livello / *Level plug* / Pegel
▼ Scarico / *Drain plug* / Ablassschraube

	Posizioni di montaggio - Mounting positions - Montagepositionen		
		Posizioni Positions Positionen	Prescrizioni da indicare in fase d'ordine Ordering requirements Anforderungen bei der Bestellung
RI RMI	28	M1-M2 M3-M4 M5-M6	**Non necessaria** ***Not necessary*** **Nicht erforderlich**
	40		
	50		
	63		
	70		
	85	M1-M2 M3-M4 M5-M6	**Necessaria** **Necessary** **Erforderlich**
	110		
	130		
	150		
	180		
	215		
	250		

M3-M4
Particolare attenzione va posta per i riduttori montati nelle posizioni M3 e M4 che sono forniti con il cuscinetto schermato.

M3-M4
Particular attention should be paid to worm gearboxes with a shielded bearing mounted in positions M3 and M4.

M3-M4
Besondere Aufmerksamkeit sollte den Getrieben zukommen, die in den Einbaulagen M3 und M4 montiert werden und mit abgeschirmtem Lager geliefert werden.

TARGHETTA - RIDUTTORE

NON NECESSARIA
Indicata sempre nella targhetta del riduttore la posizione di montaggio "M1".

NECESSARIA
La posizione richiesta è indicata nella targhetta del riduttore

Identification Plate - Gearbox

NOT NECESSARY
The mounting position is always indicated on the nameplate “M1”.

NECESSARY
The indication it on the label of the gearbox

Typeschild - Getriebe

NICHT ERFORDERLICH
Die Einbaulage ist immer auf dem Typenschild angegeben “M1”.

ERFORDERLICH
Findet man die angefragte Position auf dem Typenschild des Getriebe

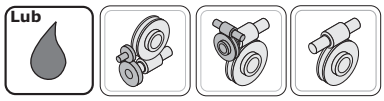

1.4 Lubrificazione

1.4 Lubrication

1.4 Schmierung

			Quantità di lubrificante - *Lubricant Quantity - Schmiermittelmenge - [Kg]*						OPT1	Tappi-Plug-Stopf		
			M1	M2	M3	M4	M5	M6		N°	Diameter	Type
RI RMI	RI-RMI	28	0.030						INOIL_STD	1	1/8"	
		40	0.060							1	1/4"	
	RI	50	0.170							1	1/4"	
	RMI		0.105							1		
	RI	63	0.350							1	3/8"	
	RMI		0.240							1		
	RI	70	0.430							1		
	RMI		0.350							1		
	RI-RMI	85	0.800 0.550 (LP-LC-LF)	0.550						1		
	RI-RMI	110	2.600	2.100					OUTOIL	3	1/2"	
		130	4.100	2.900								
		150	6.000	5.000								
		180	11.00	9.000								
		215	20.00	13.00						4	1"	
		250	29.00	20.00						4		

RI-RMI 85-110-130-150-180-215-250

M1 - Durante il riempimento attenersi ai quantitativi poiché in alcuni casi il livello del lubrificante oltrepassa la spia di livello.

M2-M3-M4-M5-M6 - Quantità indicative; durante il riempimento attenersi alla spia di livello.

Attentione !:
Il tappo di sfiato è allegato solo nei riduttori che hanno più di un tappo olio

Nota: Se in fase d'ordine la posizione di montaggio è omessa, il riduttore verrà fornito con i tappi predisposti per la posizione M1.

Eventuali forniture con predisposizioni tappi diverse da quella indicata in tabella, dovranno essere concordate.

RI-RMI 85-110-130-150-180-215-250

M1 - During filling keep to the required quantities as in some cases the level of the lubricant exceeds the level shown by the indicator:

M2-M3-M4-M5-M6 - Indicative quantities, check the oil sight glass during filling.

Warning!:
A breather plug is supplied only with worm gearboxes that have more than one oil plug

Note: If the mounting position is not specified in the order, the worm gearbox supplied will have plugs pre-arranged for position M1.

The supply of gearboxes with different plug pre-arrangements has to be agreed with the manufacturer.

RI-RMI 85-110-130-150-180-215-250

M1 - Für die Auffüllung sind die angegebenen Mengen zu beachten, da in einigen Fällen der Füllstand des Schmiermittels das Füllstands-Kontrollfenster übersteigt.

M2-M3-M4-M5-M6-Richtungsweisende Mengen, bei der Auffüllung auf das Füllstand-Kontrollfenster Bezug nehmen.

Achtung!:
Der Entlüftungsstopfen ist lediglich bei den Getrieben vorhanden, die über mehr als einen Ölfüllstopfen verfügen

Anmerkung:Sollte in der Auftragsphase die Einbaulage nicht angegeben werden, wird das Getriebe mit Stopfen für die Einbaulage M1.

Lieferungen, die eine Auslegung hinsichtlich der Stopfen aufweisen, die von den Angaben in der Tabelle abweichen, müssen vorab vereinbart werden..

1.4 Lubrificazione

1.4 Lubrication

1.4 Schmierung

Posizioni di montaggio
Mounting positions
Montagepositionen

CRI - CRMI

	Posizioni di montaggio - Mounting positions - Montagepositionen			
		Posizioni Positions Positionen	Prescrizioni da indicare in fase d'ordine Ordering requirements Anforderungen bei der Bestellung	
			SIZE 1	SIZE 2
CRI CRMI	28/28	M1-M2 M3-M4 M5-M6	Non necessaria *Not necessary* Nicht erforderlich	Non necessaria *Not necessary* Nicht erforderlich
	28/40			
	28/50			
	28/63			
	28/70			
	40/40			
	40/50			
	40/63			
	40/70			
	40/85			
	50/70			
	50/85			
	50/110			
	63/70			
	63/85			
	63/110			
	63/130			
	70/85			
	70/110			
	70/130			
	85/110	M1-M2 M3-M4 M5-M6	Necessaria Necessary Erforderlich	Non necessaria *Not necessary* Nicht erforderlich
	85/130			
	85/150			
	85/180			
	110/150			
	110/180			
	110/215			
	130/180			
	130/250			

SIZE1
Per i riduttori 85/...; 110/..., 130/... **è necessario** specificare la posizione di montaggio dei riduttori "SIZE 1" - 85 , 110 e 130 facendo riferimento allo schema dei riduttori RI-RMI.

M3-M4
Particolare attenzione va posta per i riduttori montati nelle posizioni M3 e M4 che sono forniti con il cuscinetto schermato.

TARGHETTA - RIDUTTORE

NON NECESSARIA
Indicata sempre nella targhetta del riduttore la posizione di montaggio "M1".

NECESSARIA
La posizione richiesta è indicata nella targhetta del riduttore

SIZE1
For 85/...; 110/..., 130/... , *gearboxes **it is necessary** to specify the mounting position of the gearboxes "SIZE 1" - 85, 110 and 130 referring to the RI-RMI gearbox diagram.*

M3-M4
Particular attention should be paid to worm gearboxes with a shielded bearing mounted in positions M3 and M4.

Identification Plate - Gearbox

NOT NECESSARY
The mounting position is always indicated on the nameplate “M1”.

NECESSARY
The indication it on the label of the gearbox

SIZE1
Für die Getriebe 85/...; 110/..., 130/... , **muss** die Einbaulage des Getriebes "SIZE 1" - 85, 110 und 130 verbindlich angegeben werden.
Dabei ist auf den Anschlussplan der Getriebe RI-RMI Bezug zu nehmen.

M3-M4
Besondere Aufmerksamkeit sollte den Getrieben zukommen, die in den Einbaulagen M3 und M4 montiert werden und mit abgeschirmtem Lager geliefert werden.

Typeschild - Getriebe

NICHT ERFORDERLICH
Die Einbaulage ist immer auf dem Typenschild angegeben “M1”.

ERFORDERLICH
Findet man die angefragte Position auf dem Typenschild des Getriebe

1.4 Lubrificazione

1.4 Lubrication

1.4 Schmierung

Lub	Quantità di lubrificante - *Lubricant Quantity - Schmiermittelmenge - [Kg]*										OPT1	Tappi-Plug-Stopf		
		Size 1	M1	M2	M3	M4	M5	M6	Size 2	M1-M2-M3 M4-M5-M6		N°	Diameter	Type
CRI CRMI	28/28	28	0.030						28	0.030	INOIL_STD	Vedere corrispettiva SIZE1 e SIZE2 facendo riferimento ai riduttori della serie R See corresponding SIZE1 and SIZE2 with reference to gear series R Siehe entsprechend SIZE 1 und SIZE 2 mit Bezug auf die Getriebe der Serie R		
	28/40	28							40	0.060				
	28/50	28							50	0.105				
	28/63	28							63	0.240				
	28/70	28							70	0.350				
	40/40	40	0.060						40	0.060				
	40/50	40							50	0.105				
	40/63	40							63	0.240				
	40/70	40							70	0.350				
	40/85	40							85	0.800 0.550*				
	50/70	50	CRI - 0.170 CRMI - 0.105						70	0.350				
	50/85	50							85	0.800 0.550*				
	50/110	50							110	2.600				
	63/70	63	CRI - 0.350 CRMI - 0.240						70	0.350				
	63/85	63							85	0.800 0.550*				
	63/110	63							110	2.600				
	63/130	63							130	4.100				
	70/85	70	CRI - 0.430 CRMI - 0.350						85	0.800 0.550*				
	70/110	70							110	2.600				
	70/130	70							130	4.100				
	85/110	85	0.800 0.550*	0.550					110	2.600	OUTOIL			
	85/130	85							130	4.100				
	85/150	85							150	6.000				
	85/180	85							180	11.00				
	110/150	110	2.600	2.100					150	6.000				
	110/180	110							180	11.00				
	110/215	110							215	20.00				
	130/180	130	4.100	2.900					180	11.00				
	130/250	130							250	29.00				

Lub

SIZE 1
RI-RMI 85-110-130

M1 - Durante il riempimento attenersi ai quantitativi poiché in alcuni casi il livello del lubrificante oltrepassa la spia di livello.

M2-M3-M4-M5-M6 - Quantità indicative; durante il riempimento attenersi alla spia di livello.

SIZE 2
Durante il riempimento attenersi ai quantitativi poiché in alcuni casi il livello del lubrificante oltrepassa la spia di livello.

SIZE 1-SIZE2
*** RI-RMI 85 -** Versioni LC-LP-LF.

SIZE 1
RI-RMI 85-110-130

M1 - During filling keep to the required quantities as in some cases the level of the lubricant exceeds the level shown by the indicator.

M2-M3-M4-M5-M6 - Indicative quantities, check the oil sight glass during filling.

SIZE 2
During filling keep to the required quantities as in some cases the level of the lubricant exceeds the level shown by the indicator.

SIZE1-SIZE2
***RI-RMI 85 -** Versions LC-LP-LF.

SIZE 1
RI-RMI 85-110-130

M1 - Für die Auffüllung sind die angegebenen Mengen zu beachten, da in einigen Fällen der Füllstand des Schmiermittels das Füllstands-Kontrollfenster übersteigt.

M2-M3-M4-M5-M6-Richtungsweisende Mengen, bei der Auffüllung auf das Füllstand-Kontrollfenster Bezug nehmen.

SIZE 2
Für die Auffüllung sind die angegebenen Mengen zu beachten, da in einigen Fällen der Füllstand des Schmiermittels das Füllstands-Kontrollfenster übersteigt.

SIZE1-SIZE2
* **RI-RMI 85 -** Ausführungen LC-LP-LF.

1.4 Lubrificazione

1.4 Lubrication

1.4 Schmierung

Posizioni di montaggio
Mounting positions
Montagepositionen

CR - CB

40 - 50 - 70 - 85 - 110

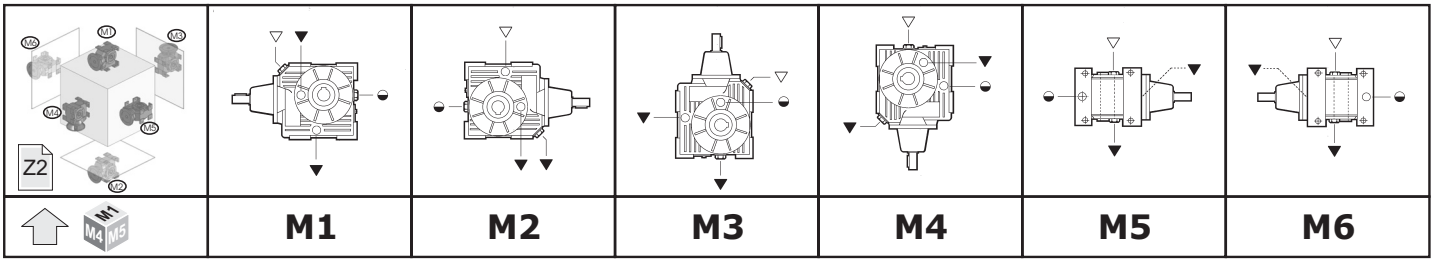

	M1	M2	M3	M4	M5	M6

▽ Carico / *Breather plug* / Nachfüllen - Entlüftung
◒ Livello / *Level plug* / Pegel
▼ Scarico / *Drain plug* / Ablassschraube

	Posizioni di montaggio - Mounting positions - Montagepositionen		
		Posizioni Positions Positionen	Prescrizioni da indicare in fase d'ordine Ordering requirements Anforderungen bei der Bestellung
CR CB	40	M1-M2 M3-M4 M5-M6	**Non necessaria** ***Not necessary*** **Nicht erforderlich**
	50		**Necessaria** **Necessary** **Erforderlich**
	70		
	85		
	110		

TARGHETTA - RIDUTTORE

NON NECESSARIA
Indicata sempre nella targhetta del riduttore la posizione di montaggio "M1".

NECESSARIA
La posizione richiesta è indicata nella targhetta del riduttore

Identification Plate - Gearbox

NOT NECESSARY
The mounting position is always indicated on the nameplate "M1".

NECESSARY
The indication it on the label of the gearbox

Typeschild - Getriebe

NICHT ERFORDERLICH
Die Einbaulage ist immer auf dem Typenschild angegeben "M1".

ERFORDERLICH
Findet man die angefragte Position auf dem Typenschild des Getriebe

1.4 Lubrificazione

1.4 Lubrication

1.4 Schmierung

Lub	Quantità di lubrificante - *Lubricant Quantity - Schmiermittelmenge - [Kg]*							OPT1	Tappi-Plug-Stopf		
		M1	M2	M3	M4	M5	M6		N°	Diameter	Type
CR CB	40	0.260	0.260	0.260	0.260	0.260	0.260	INOIL_STD	1	1/4"	
	50	0.440	0.600	0.600	0.600	0.440	0.440		1	1/4"	
	70	0.950	1.300	1.300	1.300	0.950	0.950		1	3/8"	
	85	1.550	2.800	2.800	2.800	1.550	1.550	OUTOIL	4	3/8"	
	110	3.600	6.000	6.000	6.000	3.600	3.600		4	1/2"	

Durante il riempimento attenersi ai quantitativi poiché in alcuni casi il livello del lubrificante oltrepassa la spia di livello.

Attentione !:
Il tappo di sfiato è allegato solo nei riduttori che hanno più di un tappo olio

Nota: Se in fase d'ordine la posizione di montaggio è omessa, il riduttore verrà fornito con i tappi predisposti per la posizione M1.

Eventuali forniture con predisposizioni tappi diverse da quella indicata in tabella, dovranno essere concordate.

During filling keep to the required quantities as in some cases the level of the lubricant exceeds the level shown by the indicator.

Warning!:
A breather plug is supplied only with worm gearboxes that have more than one oil plug

Note: If the mounting position is not specified in the order, the worm gearbox supplied will have plugs pre-arranged for position M1.

The supply of gearboxes with different plug pre-arrangements has to be agreed with the manufacturer.

Für die Auffüllung sind die angegebenen Mengen zu beachten, da in einigen Fällen der Füllstand des Schmiermittels das Füllstands-Kontrollfenster übersteigt.

Achtung!:
Der Entlüftungsstopfen ist lediglich bei den Getrieben vorhanden, die über mehr als einen Ölfüllstopfen verfügen

Anmerkung:Sollte in der Auftragsphase die Einbaulage nicht angegeben werden, wird das Getriebe mit Stopfen für die Einbaulage M1.

Lieferungen, die eine Auslegung hinsichtlich der Stopfen aufweisen, die von den Angaben in der Tabelle abweichen, müssen vorab vereinbart werden..

1.4 Lubrificazione

1.4 Lubrication

1.4 Schmierung

Posizioni di montaggio
Mounting positions
Montagepositionen

CR - CB

130 - 150 - 180 - 215 - 250

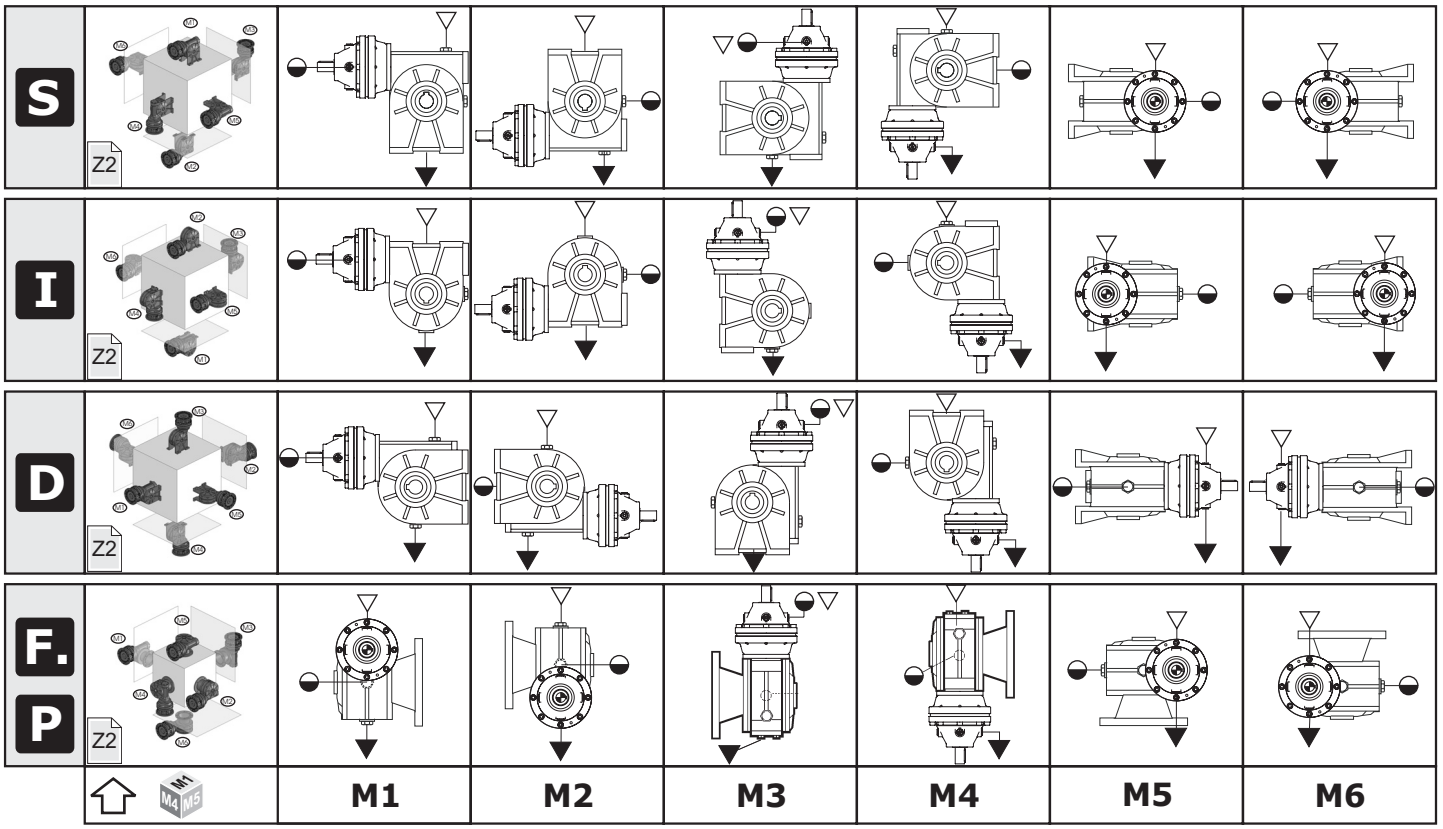

▽ Carico / *Breather plug* / Nachfüllen - Entlüftung
◒ Livello / *Level plug* / Pegel
▼ Scarico / *Drain plug* / Ablassschraube

	Posizioni di montaggio - Mounting positions - Montagepositionen		
		Posizioni Positions Positionen	Prescrizioni da indicare in fase d'ordine Ordering requirements Anforderungen bei der Bestellung
CR CB	130	M1-M2 M3-M4 M5-M6	Necessaria Necessary Erforderlich
	150		
	180		
	215		
	250		

TARGHETTA - RIDUTTORE

NON NECESSARIA
Indicata sempre nella targhetta del riduttore la posizione di montaggio "M1".

NECESSARIA
La posizione richiesta è indicata nella targhetta del riduttore

Identification Plate - Gearbox

NOT NECESSARY
The mounting position is always indicated on the nameplate “M1”.

NECESSARY
The indication it on the label of the gearbox

Typeschild - Getriebe

NICHT ERFORDERLICH
Die Einbaulage ist immer auf dem Typenschild angegeben “M1”.

ERFORDERLICH
Findet man die angefragte Position auf dem Typenschild des Getriebe

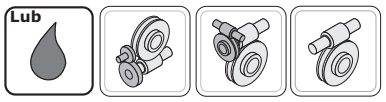

1.4 Lubrificazione

1.4 Lubrication

1.4 Schmierung

Lub	Quantità di lubrificante - *Lubricant Quantity - Schmiermittelmenge - [Kg]*							OPT1	Tappi-Plug-Stopf		
		M1	M2	M3	M4	M5	M6		N°	Diameter	Type
CR CB	130	5.100	3.900	5.750	3.900	3.400	3.400	OUTOIL	5-CB 7-CR	1/2" - 1/4"	
	150	7.900	6.200	9.300	6.200	5.600	5.600				
	180	13.20	10.70	15.85	10.70	9.850	9.850				
	215	23.45	14.90	27.55	14.90	13.95	13.95		6-CB 8-CR	1" - 1/4"	
	250	34.45	22.90	40.95	22.90	21.45	21.45		6-CB 8-CR	1" - 3/8"	

B

Quantità indicative; durante il riempimento attenersi alla spia di livello.

Attentione !:
Il tappo di sfiato è allegato solo nei riduttori che hanno più di un tappo olio

Nota: Se in fase d'ordine la posizione di montaggio è omessa, il riduttore verrà fornito con i tappi predisposti per la posizione M1.

Eventuali forniture con predisposizioni tappi diverse da quella indicata in tabella, dovranno essere concordate.

Indicative quantities, check the oil sight glass during filling.

Warning!:
A breather plug is supplied only with worm gearboxes that have more than one oil plug

Note: If the mounting position is not specified in the order, the worm gearbox supplied will have plugs pre-arranged for position M1.

The supply of gearboxes with different plug pre-arrangements has to be agreed with the manufacturer.

Richtungsweisende Mengen, bei der Auffüllung auf das Füllstand-Kontrollfenster Bezug nehmen.

Achtung!:
Der Entlüftungsstopfen ist lediglich bei den Getrieben vorhanden, die über mehr als einen Ölfüllstopfen verfügen

Anmerkung:Sollte in der Auftragsphase die Einbaulage nicht angegeben werden, wird das Getriebe mit Stopfen für die Einbaulage M1.

Lieferungen, die eine Auslegung hinsichtlich der Stopfen aufweisen, die von den Angaben in der Tabelle abweichen, müssen vorab vereinbart werden..

1.5 Carichi radiali e assiali

Quando la trasmissione del moto avviene tramite meccanismi che generano carichi radiali sull'estremità dell'albero,è necessario verificare che i valori risultanti non eccedono quelli indicati nelle tabelle.

Nella Tab. 2.5 - 2.6 sono riportati i valori dei carichi radiali ammissibili per l'albero veloce (Fr_1). Come carico assiale ammissibile contemporaneo si ha:

$$Fa_1 = 0.2 \times Fr_1$$

1.5 Axial and overhung loads

Should transmission movement determine radial loads on the angular shaft end, it is necessary to make sure that resulting values do not exceed the ones indicated in the tables.

In Table 2.5 - 2.6 permissible radial load for input shaft are listed (Fr_1). Contemporary permissible axial load is given by the following formula:

$$Fa_1 = 0.2 \times Fr_1$$

1.5 Radiale und Axiale Belastungen

Wird das Wellenende auch durch Radialkräfte belastet, so muß sichergestellt werden, daß die resultierenden Werte die in der Tabelle angegebenen nicht überschreiten.

In Tabelle 2.5 - 2.6 sind die Werte der zulässigen Radialbelastungen für die Antriebswelle (Fr_1) angegeben. Die Axialbelastung beträgt dann:

$$Fa_1 = 0.2 \times Fr_1$$

Tab. 2.5

RI

CRI

n_1 min^{-1}	Fr_1 (N)											
	RI - CRI											
	28	**40**	**50**	**63**	**70**	**85**	**110**	**130**	**150**	**180**	**215**	**250**
2800	51	187	272	357	425	595	850	1360	1870	2125	2593	3370
1400	60	220	320	420	500	700	1000	1600	2200	2500	3250	4225
900	60	250	350	460	530	800	1200	1800	2350	2700	3500	4600
700	70	280	400	500	570	900	1300	2000	2500	3000	3800	4800
500	70	310	450	530	600	1000	1450	2200	2700	3200	4000	5300

Tab. 2.6

CR

n_1 min^{-1}	Fr_1 (N)									
	CR									
	40	**50**	**70**	**85**	**110**	**130**	**150**	**180**	**215**	**250**
2800	468	510	723	808	1275	900	900	4000	4000	7000
1400	550	600	850	950	1500	1000	1000	5000	5000	8000
900	605	660	935	1045	1650	1200	1200	6000	6000	10000

In Tab. 2.7 - 2.8 sono riportati i valori dei carichi radiali ammissibili per l'albero lento (Fr_2) . Come carico assiale ammissibile contemporaneo si ha:

$$Fa_2 = 0.2 \times F_{r2}$$

In Table 2.6 - 2.8 permissible radial loads for output shaft are listed (Fr_2).
Permissible axial load is given by the following formula:

$$Fa_2 = 0.2 \times Fr_2$$

In Tabelle 2.6 - 2.8 sind die Werte der zulässigen Radialbelastungen für die Abtriebswelle angegeben.
Als zulässige Axialbelas- tung gilt:

$$Fa_2 = 0.2 \times Fr_2$$

Tab. 2.7

RI
RMI

CRI
CRMI

n_2 min^{-1}	Fr_2 (N)									
	RI - RMI - CRI - CRMI									
	28	**40**	**50**	**63**	**70**	**85**	**110**	**130**	**150**	**180**
400	506	686	925	946	1279	1626	2168	2890	4263	4516
280	595	808	1088	1114	1505	1913	2550	3400	5015	5313
200	700	950	1280	1310	1770	2250	3000	4000	5900	6250
140	750	1050	1450	1680	2350	2400	3150	4250	6700	6900
93	800	1200	1620	1740	2700	2500	3600	4800	7500	7500
70	900	1350	1850	1930	3100	2650	4150	5300	8400	8500
50	950	1500	2100	2150	3300	3560	4850	6600	9400	10300
35	1000	1600	2230	2300	3700	3850	5700	7500	10100	11500
29	1070	1700	2400	2500	3900	4400	6200	8200	11100	12500
25	1130	1800	2580	2700	4100	4620	6600	8750	12000	13400
20	1200	1950	2700	2900	4300	5150	7200	9600	12700	15200
18	1280	2100	2850	3100	4450	5500	7800	10300	14000	16300
14	1430	2300	3200	3300	4700	5800	8250	10700	15000	17000

Nei riduttori CRI-CRMI utilizzare i carichi a 14 min^{-1} (ovviamente i valori indicati in tabella si riferiscono al secondo riduttore).

Use 14 min^{-1} loads in the CRI-CRMI gearboxes (obviously the values in the table refer to the second gearbox).

Bei den Getrieben CRI-CRMI sind Lasten mit 14 min^{-1} zu verwenden (die in der Tabelle angegebenen Werte beziehen sich natürlich auf das zweite Getriebe).

1.5 Carichi radiali e assiali

1.5 Axial and overhung loads

1.5 Radiale und Axiale Belastungen

CR
CB

Tab. 2.8

n_2 min^{-1}	Fr_2 (N) CR - CB							
	40	**50**	**70**	**85**	**110**	**130**	**150**	**180**
30	1700	2400	3900	4400	6200	8200	11100	12500
27	1800	2580	4100	4620	6600	8750	12000	13400
23	1850	2600	4200	4800	6800	8900	12500	14000
20	1950	2700	4300	5150	7200	9600	12700	15200
16	2100	2850	4450	5500	7800	10300	14000	16300
13	2300	3200	4700	5800	8250	10700	15000	17000
10	2300	3200	4700	5800	8250	10700	15000	17000
5	2300	3350	4700	5800	8250	10700	15000	17000

A richiesta possono essere fornite versioni rinforzate con cuscinetti a rulli conici sulla corona in grado di sopportare carichi superiori a quelli ammessi dalle versioni normali.
Si veda a tal proposito la tabella 2.9 - 2.10, in cui sono riportati i valori dei carichi radiali e assiali ammissibili sull'albero uscita nel caso di cuscinetti conici sulla corona. Si consiglia, in questi casi, di adottare versioni flangiate, verificando che il carico assiale venga interamente assorbito dal cuscinetto alloggiato nella flangia di fissaggio.
Si sconsiglia, invece (nei riduttori RI-RMI, CRI-CRMI) la versione a piede , in quanto la resistenza meccanica della struttura non è sufficiente a garantire la necessaria sicurezza sia statica sia dinamica (urti e sovraccarichi).
Tale soluzione non è prevista sulla grandezza 28.

In order to increase the load capacity of the gearboxes it is possible to fit taper roller bearings on to the output shaft. Such reinforced versions are available upon request.
With regard to this reinforced version, let see output radial and axial load values shown on tab. 2.9 - 2.10. It's advisable to use flange mounted versions and to make sure that the axial load is absorbed by the bearing, housed in the fixing flange.
The foot mounted version is not recommended, because the structural safety is very reduced, with regard both to static and dynamic conditions.

Please note that this solution is not available for size 28.

Für größere Belastungen stehen auf Wunsch auch verstärkte Ausführungen mit Kegelrollenlagern für die Schneckenwelle zur Verfügung.
Tabelle 2.9 - 2.10 listet die zulässigen Radial- und Axiallasten bei Verwendung von Kegelrollenlagern auf. Es wird in diesen Fällen empfohlen, Flanschausführungen zu verwenden und sicherzustellen, daß die axiale Last vollständig vom Lager, das sich im Befestigungsflansch befindet, aufgenommen wird. Die Fuâversion empfiehlt sich in diesem Falle nicht, da deren Festigkeit nicht ausreicht, um die erforderliche Sicherheit gegen Stoße und Überlasten sowohl in statischer wie in dynamischer Hinsicht zu gewährleisten.
Hinweis:

Für die Baugröße 28 ist diese Lösung nicht vorgesehen.

RI
RMI

CRI
CRMI

Tab. 2.9

CARICHI RADIALI - ASSIALI CON CUSCINETTI CONICI SULLA CORONA
AXIAL AND OVERHUNG LOADS WITH TAPER ROLLER BEARINGS ON WORMWHEEL
RADIALE UND AXIALE BELASTUNGEN MIT KEGELROLLENLAGERN AUF DEM SCHNECKENRAD [N]

n_2 (rpm)	RI - RMI																					
	40		**50**		**63**		**70**		**85**		**110**		**130**		**150**		**180**		**215**		**250**	
	Fr_2	Fa_2	Fr_2	Fa_2	Fr_2	Fa_2	Fr_2	Fa_2	Fr_2	Fa_2	Fr_2	Fa_2	Fr_2	Fa_2	Fr_2	Fa_2	Fr_2	Fa_2	Fr2	Fa2	Fr2	Fa2
400	2076	2708	4603	5325	4693	5415	5415	6588	5415	7220	7671	9837	7491	10559	14440	18772	17148	22382	20921	27306	25105	32767
280	2185	2850	4845	5605	4940	5700	5700	6935	5700	7600	8075	10355	7885	11115	15200	19760	18050	23560	22021	28743	26425	34492
200	2300	3000	5100	5900	5200	6000	6000	7300	6000	8000	8500	10900	8300	11700	16000	20800	19000	24800	23180	30256	27816	36307
140	2300	3000	5600	6500	5750	6650	6700	8200	6600	8800	9200	11800	8400	11850	17500	22700	20000	26000	24400	31720	29280	38064
93	2300	3000	6300	7300	6500	7550	7500	9150	7600	10100	9200	11800	9000	12700	18500	24000	21000	27400	25620	33428	30744	40114
70	2300	3000	6550	7600	6200	7200	7600	9300	6500	8650	9200	11800	9500	13400	19200	25000	22000	28700	26840	35014	32208	42017
50	2300	3000	6900	8000	6900	8000	8700	10600	7900	10500	10600	13600	10000	14100	20000	26000	23000	30000	28060	36600	33672	43920
35	2300	3000	6900	8000	6900	8000	9000	11000	9000	12000	13900	17800	12600	17750	20000	26000	23000	30000	28060	36600	33672	43920
29	2300	3000	6900	8000	6900	8000	9000	11000	9000	12000	14800	19000	13600	19200	20000	26000	23000	30000	28060	36600	33672	43920
25	2300	3000	6900	8000	6900	8000	9000	11000	9000	12000	14800	19000	14600	20600	20000	26000	23000	30000	28060	36600	33672	43920
20	2300	3000	6900	8000	6900	8000	9000	11000	9000	12000	14800	19000	15600	22000	20000	26000	23000	30000	28060	36600	33672	43920
18	2300	3000	6900	8000	6900	8000	9000	11000	9000	12000	14800	19000	15600	22000	20000	26000	23000	30000	28060	36600	33672	43920

1.5 Carichi radiali e assiali

1.5 Axial and overhung loads

1.5 Radiale und Axiale Belastungen

Tab. 2.10

CR
CB

CARICHI RADIALI - ASSIALI CON CUSCINETTI CONICI SULLA CORONA
AXIAL AND OVERHUNG LOADS WITH TAPER ROLLER BEARINGS ON WORMWHEEL
RADIALE UND AXIALE BELASTUNGEN MIT KEGELROLLENLAGERN AUF DEM SCHNECKENRAD [N]

n_2 (rpm)	CR - CB																			
	40		50		70		85		110		130		150		180		215		250	
	Fr_2	Fa_2	Fr_2	Fa_2	Fr_2	Fa_2	Fr_2	Fa_2	Fr_2	Fa_2	Fr_2	Fa_2	Fr_2	Fa_2	Fr_2	Fa_2	Fr2	Fa2	Fr2	Fa2
60	2300	3000	6550	7600	7600	9300	6500	8650	9200	11800	9500	13400	19200	25000	22000	28700	26840	35014	32208	42017
50	2300	3000	6900	8000	8700	10600	7900	10500	10600	13600	10000	14100	20000	26000	23000	30000	28060	36600	33672	43920
40	2300	3000	6900	8000	9000	11000	9000	12000	13900	17800	12600	17750	20000	26000	23000	30000	28060	36600	33672	43920
30	2300	3000	6900	8000	9000	11000	9000	12000	14800	19000	13600	19200	20000	26000	23000	30000	28060	36600	33672	43920
25	2300	3000	6900	8000	9000	11000	9000	12000	14800	19000	14600	20600	20000	26000	23000	30000	28060	36600	33672	43920
20	2300	3000	6900	8000	9000	11000	9000	12000	14800	19000	15600	22000	20000	26000	23000	30000	28060	36600	33672	43920
15	2300	3000	6900	8000	9000	11000	9000	12000	14800	19000	15600	22000	20000	26000	23000	30000	28060	36600	33672	43920
10	2300	3000	6900	8000	9000	11000	9000	12000	14800	19000	15600	22000	20000	26000	23000	30000	28060	36600	33672	43920
5	2300	3000	6900	8000	9000	11000	9000	12000	14800	19000	15600	22000	20000	26000	23000	30000	28060	36600	33672	43920

I carichi radiali indicati nelle tabelle si intendono applicati a metà della sporgenza dell'albero e sono riferiti ai riduttori operanti con fattore di servizio 1.
Valori intermedi relativi a velocità non riportate possono essere ottenuti per interpolazione considerando però che Fr_1 a 500 min^{-1} e Fr_2 a 14 min^{-1} rappresentano i carichi massimi consentiti.
Per i carichi non agenti sulla mezzeria dell'albero lento o veloce si ha:

a 0.3 della sporgenza:
$Fr_x = 1.25 \times Fr_{1-2}$
a 0.8 dalla sporgenza:
$Fr_x = 0.8 \times Fr_{1-2}$

The radial loads shown in the tables are applied on the centre line of the shaft extension and are related to gearboxes working with service factor 1.
Intermediate values of speeds that are not listed can be obtained through interpolation but it must be considered that Fr_1 at 500 min^{-1} and Fr_2 at 14 min^{-1} represent the maximum allowable loads.
For loads which are not applied on the centre line of the output or input shaft, following values will be obtained:

at 0.3 from extension:
$Fr_x = 1.25 \times Fr_{1-2}$
at 0.8 from extension:
$Fr_x = 0.8 \times Fr_{1-2}$

Bei den in der Tabelle angegebenen Ra dialbelastungen wird eine Krafteinwirkung auf die Mitte des Wellenendes zugrunde gelegt; außerdem arbeiten die Getriebe mit Betriebsfaktor 1. Zwischenwerte für nicht aufgeführte Drehzahlen können durch Interpolation ermittelt werden. Hierbei ist jedoch zu berücksichtigen, daß die Werte von Fr_1 bei 500 min^{-1} und von Fr_2 bei 14 min^{-1} die Maximalbelastungen repräsentieren.
Bei Lasten, die nicht auf die Mitte der Ab- bzw. Antriebswellen wirken, legt man folgende Werte zugrunde:

0.3 vom Wellenabsatz:
$Fr_x = 1.25 \times Fr_{1-2}$
0.8 vom Wellenabsatz:
$Fr_x = 0.8 \times Fr_{1-2}$

Tab. 2.11

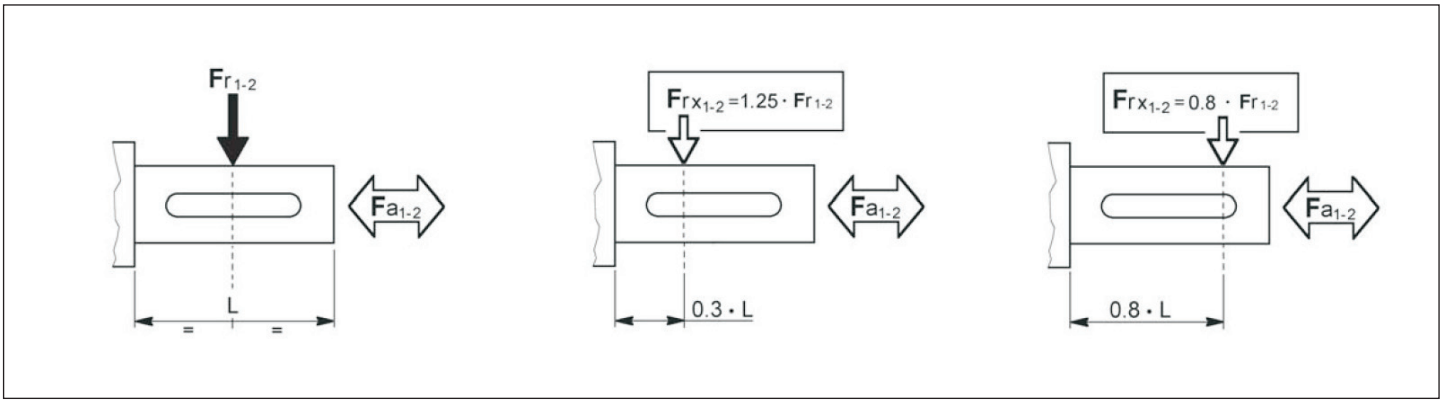

1.6 Prestazioni riduttori RI — *1.6 RI Gearboxes performances* — 1.6 Leistungen der RI-Getriebe

RI 28

Kg 1.4

ir	n_1 = 2800 min^{-1}				n_1 = 1400 min^{-1}				n_1 = 900 min^{-1}				n_1 = 500 min^{-1}				RMI	RMI...G
	n_2 min^{-1}	T_{2M} Nm	P kW	RD %	n_2 min^{-1}	T_{2M} Nm	P kW	RD %	n_2 min^{-1}	T_{2M} Nm	P kW	RD %	n_2 min^{-1}	T_{2M} Nm	P kW	RD %	IEC	
7	400	11	0.56	83	200	15	0.39	81	129	18	0.31	79	71	22	0.21	78	63-56	–
10	280	13	0.47	81	140	17	0.32	79	90	20	0.24	77	50	24	0.17	76		
15	187	14	0.35	78	93	18	0.23	75	60	20	0.17	73	33	24	0.12	71		
20	140	12	0.23	75	70	15	0.15	72	45	18	0.12	69	25	21	0.08	67		
28	100	15	0.23	69	50	19	0.16	64	32	21	0.12	61	17.9	25	0.08	58		
40	70	13	0.15	64	35	16	0.10	59	23	18	0.08	56	12.5	21	0.05	53		
49	57	12	0.12	61	29	15	0.08	56	18.4	17	0.06	52	10.2	20	0.04	49	56	
56	50	12	0.11	59	25	15	0.07	54	16.1	17	0.06	52	8.9	19	0.04	47		
70	40	11	0.08	55	20	13	0.06	49	12.9	15	0.04	46	7.1	17	0.03	43		
80	35	10	0.07	50	17.5	12	0.05	45	11.3	13	0.04	41	6.3	15	0.03	38		
100	28	9	0.06	47	14.0	10	0.04	41	9.0	10	0.02	38	5.0	11	0.02	35		

RI 40

Kg 2.1

ir	n_1 = 2800 min^{-1}				n_1 = 1400 min^{-1}				n_1 = 900 min^{-1}				n_1 = 500 min^{-1}				RMI	RMI...G
	n_2 min^{-1}	T_{2M} Nm	P kW	RD %	n_2 min^{-1}	T_{2M} Nm	P kW	RD %	n_2 min^{-1}	T_{2M} Nm	P kW	RD %	n_2 min^{-1}	T_{2M} Nm	P kW	RD %	IEC	
5	560	27	1.8	86	280	37	1.28	85	180	44	1.00	83	100	54	0.69	82	71-63-56	71-63-56
7	400	27	1.3	84	200	37	0.93	83	129	44	0.73	81	71	54	0.50	80		
10	280	31	1.1	83	140	42	0.76	81	90	49	0.58	79	50	59	0.40	78		
15	187	32	0.78	80	93	42	0.53	77	60	49	0.41	75	33	59	0.28	73		
20	140	29	0.56	76	70	37	0.37	73	45	43	0.29	70	25	51	0.20	67		
28	100	34	0.50	71	50	43	0.34	67	32	50	0.26	64	17.9	59	0.18	61		
40	70	32	0.36	65	35	40	0.24	60	23	45	0.19	56	12.5	53	0.13	53		
49	57	30	0.29	62	29	38	0.20	57	18.4	43	0.16	53	10.2	50	0.11	49	63-56	
56	50	28	0.24	60	25	36	0.17	54	16.1	40	0.13	51	8.9	47	0.09	47		
70	40	23	0.18	53	20	28	0.12	47	12.9	32	0.10	44	7.1	37	0.07	39		
80	35	21	0.15	50	17.5	26	0.11	44	11.3	29	0.09	40	6.3	34	0.06	36		
100	28	23	0.13	51	14.0	28	0.09	45	9.0	30	0.07	41	5.0	31	0.04	38		

RI 50

Kg 3.8

ir	n_1 = 2800 min^{-1}				n_1 = 1400 min^{-1}				n_1 = 900 min^{-1}				n_1 = 500 min^{-1}				RMI	RMI...G
	n_2 min^{-1}	T_{2M} Nm	P kW	RD %	n_2 min^{-1}	T_{2M} Nm	P kW	RD %	n_2 min^{-1}	T_{2M} Nm	P kW	RD %	n_2 min^{-1}	T_{2M} Nm	P kW	RD %	IEC	
5	560	45	3.0	87	280	65	2.2	86	180	75	1.7	85	100	95	1.18	84	80-71	80-71-63
7	400	50	2.5	85	200	68	1.7	84	129	81	1.3	83	71	100	0.91	82		
10	280	55	1.9	84	140	73	1.3	82	90	86	1.0	81	50	105	0.70	79		
15	187	58	1.4	82	93	76	0.93	80	60	89	0.71	79	33	106	0.48	77		
20	140	57	1.1	79	70	74	0.71	76	45	86	0.55	74	25	102	0.38	71		
28	100	62	0.88	74	50	80	0.60	70	32	92	0.46	67	17.9	109	0.32	64	80-71-63	
40	70	64	0.67	70	35	81	0.45	66	23	92	0.34	63	12.5	108	0.24	59		
49	57	57	0.51	67	29	72	0.34	63	18.4	82	0.27	59	10.2	96	0.19	55	71-63	
56	50	55	0.44	65	25	69	0.30	60	16.1	78	0.23	56	8.9	91	0.16	53		
70	40	52	0.36	61	20	64	0.24	56	12.9	72	0.19	52	7.1	84	0.13	48		
80	35	47	0.30	57	17.5	58	0.21	51	11.3	66	0.17	47	6.3	75	0.11	43		
100	28	42	0.23	54	14.0	52	0.16	48	9.0	59	0.13	44	5.0	60	0.08	40		

ATTENZIONE!

Per situazioni con velocità di ingresso particolari attenersi alla tabella pagina A2.

I pesi riportati sono indicativi e possono variare in funzione della versione del riduttore.

N.B. Per i riduttori evidenziati dal doppio bordo nella colonna delle potenze è necessario verificare lo scambio termico del riduttore (come nel par. 1.7-A). Per maggiori informazioni contattare l'ufficio tecnico STM.

WARNING!

If in presence of non standard input speed please attain to the page A2.

Listed weights are for reference only and can vary according to the gearbox version.

NOTE. Please pay attention to the frame around the input power value: for this gearboxes it's important to check the thermal capacity (comp. chapter 1.7-A). For details please contact our technical department.

ACHTUNG!

Mit unstandardisierte Antriebsgeschwindigkeit bitte auf Seite A2.

Die angegebenen Gewichte sind Richtwerte und können je nach Getriebeversion etwas variieren.

HINWEIS. Sind in den Tabellen Nennleistungen eingerahmt, so ist die thermische Leistungsgrenze der Getriebe zu beachten (s. S. 1.7-A).
Für weitere Informationen wenden Sie sich bitte and unser technisches Büro.

1.6 Prestazioni riduttori RI — *1.6 RI Gearboxes performances* — 1.6 Leistungen der RI-Getriebe

RI 63

Kg 6.0

ir	n_1 = 2800 min^{-1} ⚠				n_1 = 1400 min^{-1}				n_1 = 900 min^{-1}				n_1 = 500 min^{-1}				RMI	RMI...G
	n_2 min^{-1}	T_{2M} Nm	P kW	RD %	n_2 min^{-1}	T_{2M} Nm	P kW	RD %	n_2 min^{-1}	T_{2M} Nm	P kW	RD %	n_2 min^{-1}	T_{2M} Nm	P kW	RD %	IEC	
5	560	79	5.3	88	280	110	3.8	86	180	132	2.9	86	100	164	2.0	85	90-80-71	90-80-71
7	400	84	4.1	86	200	115	2.9	84	129	137	2.2	84	71	169	1.5	83		
10	280	93	3.2	84	140	126	2.2	83	90	149	1.7	81	50	182	1.2	80		
15	187	98	2.3	82	93	131	1.6	80	60	153	1.2	78	33	184	0.85	76		
20	140	104	1.9	80	70	136	1.3	77	45	158	0.99	75	25	189	0.69	72		
28	100	105	1.5	75	50	135	1.0	71	32	156	0.77	68	17.9	186	0.54	65		
40	70	113	1.2	71	35	145	0.79	67	23	166	0.61	64	12.5	195	0.43	60		
49	57	98	0.85	69	29	125	0.58	64	18.4	142	0.45	61	10.2	166	0.31	57	80-71	
56	50	101	0.79	67	25	127	0.54	62	16.1	145	0.42	58	8.9	169	0.29	54		
70	40	94	0.62	63	20	117	0.42	58	12.9	133	0.33	54	7.1	154	0.23	50		
80	35	88	0.53	61	17.5	110	0.37	55	11.3	124	0.29	51	6.3	144	0.20	47		
100	28	80	0.41	57	14.0	99	0.28	51	9.0	112	0.22	47	5.0	125	0.15	43		

RI 70

Kg 7.5

ir	n_1 = 2800 min^{-1} ⚠				n_1 = 1400 min^{-1}				n_1 = 900 min^{-1}				n_1 = 500 min^{-1}				RMI	RMI...G
	n_2 min^{-1}	T_{2M} Nm	P kW	RD %	n_2 min^{-1}	T_{2M} Nm	P kW	RD %	n_2 min^{-1}	T_{2M} Nm	P kW	RD %	n_2 min^{-1}	T_{2M} Nm	P kW	RD %	IEC	
7	400	95	4.6	86	200	132	3.3	85	129	158	2.5	84	71	195	1.8	83	112-100 90-80	—
10	280	105	3.7	84	140	142	2.5	83	90	168	1.9	82	50	205	1.3	80		
15	187	109	2.6	82	93	145	1.8	80	60	170	1.4	78	33	205	0.94	76		
20	140	115	2.1	80	70	151	1.4	77	45	175	1.1	75	25	210	0.76	72	90-80	
28	100	113	1.6	74	50	147	1.1	71	32	170	0.84	68	17.9	202	0.59	64		
40	70	126	1.3	71	35	162	0.89	67	23	186	0.68	64	12.5	219	0.48	60	90-80-71	
49	57	131	1.2	68	29	166	0.78	64	18.4	190	0.61	60	10.2	223	0.43	56	80-71	
56	50	132	1.0	67	25	167	0.71	62	16.1	191	0.55	58	8.9	223	0.39	54		
70	40	120	0.81	62	20	149	0.55	57	12.9	169	0.42	54	7.1	197	0.30	49		
80	35	113	0.69	60	17.5	141	0.48	54	11.3	160	0.38	50	6.3	185	0.26	46		
100	28	103	0.52	58	14.0	128	0.37	51	9.0	144	0.29	47	5.0	166	0.20	43		

RI 85

Kg 14

ir	n_1 = 2800 min^{-1} ⚠				n_1 = 1400 min^{-1}				n_1 = 900 min^{-1}				n_1 = 500 min^{-1}				RMI	RMI...G
	n_2 min^{-1}	T_{2M} Nm	P kW	RD %	n_2 min^{-1}	T_{2M} Nm	P kW	RD %	n_2 min^{-1}	T_{2M} Nm	P kW	RD %	n_2 min^{-1}	T_{2M} Nm	P kW	RD %	IEC	
7	400	177	8.6	86	200	247	6.1	85	129	297	4.8	84	71	369	3.3	83	112-100 90	—
10	280	205	7.1	85	140	280	4.9	84	90	332	3.8	83	50	407	2.6	81		
15	187	211	5.0	82	93	283	3.4	81	60	333	2.6	79	33	403	1.8	77		
20	140	236	4.3	81	70	310	2.9	79	45	362	2.2	77	25	434	1.5	74		
28	100	210	2.9	75	50	275	2.0	72	32	319	1.6	69	17.9	381	1.1	65		
40	70	242	2.5	72	35	312	1.7	69	23	359	1.3	66	12.5	424	0.90	62	100-90-80	
49	57	225	1.9	70	29	287	1.3	65	18.4	329	1.0	62	10.2	387	0.71	58	90-80	
56	50	223	1.7	70	25	283	1.1	66	16.1	322	0.87	62	8.9	377	0.61	58		
70	40	208	1.3	66	20	261	0.90	61	12.9	297	0.70	57	7.1	346	0.49	53		
80	35	194	1.1	63	17.5	243	0.77	58	11.3	276	0.60	54	6.3	320	0.42	50		
100	28	172	0.85	59	14.0	217	0.60	53	9.0	243	0.46	50	5.0	281	0.33	44		

⚠ ATTENZIONE!

Per situazioni con velocità di ingresso particolari attenersi alla tabella pagina A2.

I pesi riportati sono indicativi e possono variare in funzione della versione del riduttore.

N.B. Per i riduttori evidenziati dal doppio bordo nella colonna delle potenze è necessario verificare lo scambio termico del riduttore (come nel par. 1.7-A). Per maggiori informazioni contattare l'ufficio tecnico STM.

⚠ WARNING!

If in presence of non standard input speed please attain to the page A2.

Listed weights are for reference only and can vary according to the gearbox version.

NOTE. Please pay attention to the frame around the input power value: for this gearboxes it's important to check the thermal capacity (comp. chapter 1.7-A). For details please contact our technical department.

⚠ ACHTUNG!

Mit unstandardisierte Antriebsgeschwindigkeit bitte auf Seite A2.

Die angegebenen Gewichte sind Richtwerte und können je nach Getriebeversion etwas variieren.

HINWEIS. Sind in den Tabellen Nennleistungen eingerahmt, so ist die thermische Leistungsgrenze der Getriebe zu beachten (s. S. 1.7-A).
Für weitere Informationen wenden Sie sich bitte and unser technisches Büro.

1.6 Prestazioni riduttori RI — *1.6 RI Gearboxes performances* — 1.6 Leistungen der RI-Getriebe

RI 110

Kg 38

ir	n_1 = 2800 min^{-1}				n_1 = 1400 min^{-1}				n_1 = 900 min^{-1}				n_1 = 500 min^{-1}				RMI	RMI...G
	n_2 min^{-1}	T_{2M} Nm	P kW	RD %	n_2 min^{-1}	T_{2M} Nm	P kW	RD %	n_2 min^{-1}	T_{2M} Nm	P kW	RD %	n_2 min^{-1}	T_{2M} Nm	P kW	RD %	IEC	
7	400	341	16.6	86	200	478	11.6	86	129	577	9.1	85	71	720	6.4	84	132-112 100	—
10	280	391	13.5	85	140	537	9.3	85	90	640	7.2	84	50	788	5.0	82		
15	187	396	9.3	83	93	535	6.4	82	60	632	5.0	80	33	769	3.4	78		
20	140	465	8.3	82	70	617	5.6	81	45	722	4.3	79	25	869	3.0	76	112-100	
28	100	433	5.9	77	50	570	4.0	75	32	665	3.1	72	17.9	796	2.2	69		
40	70	493	4.9	74	35	638	3.2	72	23	737	2.6	68	12.5	873	1.8	65	112-100 90	
49	57	452	3.8	72	29	581	2.5	69	18.4	667	1.9	66	10.2	786	1.4	62		
56	50	364	2.7	71	25	465	1.8	69	16.1	532	1.4	64	8.9	624	0.97	60		
70	40	381	2.3	68	20	483	1.6	64	12.9	551	1.2	60	7.1	644	0.88	55		
80	35	390	2.2	66	17.5	491	1.5	62	11.3	559	1.1	58	6.3	651	0.80	53		
100	28	355	1.7	62	14.0	444	1.1	57	9.0	503	0.89	53	5.0	583	0.62	49		

RI 130

Kg 48

ir	n_1 = 2800 min^{-1}				n_1 = 1400 min^{-1}				n_1 = 900 min^{-1}				n_1 = 500 min^{-1}				RMI	RMI...G
	n_2 min^{-1}	T_{2M} Nm	P kW	RD %	n_2 min^{-1}	T_{2M} Nm	P kW	RD %	n_2 min^{-1}	T_{2M} Nm	P kW	RD %	n_2 min^{-1}	T_{2M} Nm	P kW	RD %	IEC	
7	400	501	24	88	200	706	16.8	88	129	855	13.2	87	71	1070	9.5	84	132-112 100	—
10	280	574	19.3	87	140	791	13.3	87	90	946	10.5	85	50	1167	7.4	83		
15	187	622	14.5	84	93	840	9.8	84	60	993	7.5	83	33	1210	5.3	80		
20	140	686	12.1	83	70	915	8.1	83	45	1073	6.2	82	25	1296	4.4	77		
28	100	607	8.4	76	50	805	5.5	76	32	941	4.2	75	17.9	1131	3.1	69		
40	70	693	6.9	74	35	903	4.5	73	23	1045	3.5	71	12.5	1243	2.5	65		
49	57	681	5.7	72	29	880	3.8	70	18.4	1014	2.8	69	10.2	1200	2.0	63	112-100	
56	50	636	4.6	72	25	814	3.1	69	16.1	935	2.3	68	8.9	1100	1.7	62		
70	40	639	3.9	69	20	812	2.5	67	12.9	928	2.0	62	7.1	1086	1.4	58		
80	35	616	3.3	68	17.5	778	2.2	64	11.3	886	1.7	60	6.3	1034	1.2	56		
100	28	551	2.5	64	14.0	691	1.7	59	9.0	785	1.3	55	5.0	913	0.94	51		

RI 150

Kg 77

ir	n_1 = 2800 min^{-1}				n_1 = 1400 min^{-1}				n_1 = 900 min^{-1}				n_1 = 500 min^{-1}				RMI	RMI...G
	n_2 min^{-1}	T_{2M} Nm	P kW	RD %	n_2 min^{-1}	T_{2M} Nm	P kW	RD %	n_2 min^{-1}	T_{2M} Nm	P kW	RD %	n_2 min^{-1}	T_{2M} Nm	P kW	RD %	IEC	
7	400	754	36	88	200	1070	25	88	129	1300	20	87	71	1630	14.2	86	160-132 112-100	—
10	280	850	29	87	140	1180	19.9	87	90	1420	15.6	86	50	1755	10.9	84		
15	187	935	22	85	93	1270	14.6	85	60	1500	11.4	83	33	1830	7.9	81		
20	140	1070	18.7	84	70	1430	12.5	84	45	1680	9.7	82	25	2040	6.8	79	132-112 100	
28	100	965	13.1	77	50	1280	8.8	76	32	1500	6.8	74	17.9	1810	4.8	71		
40	70	1070	10.3	76	35	1400	6.8	75	23	1630	5.3	73	12.5	1950	3.8	67		
49	57	1020	8.2	74	29	1320	5.6	71	18.4	1530	4.3	69	10.2	1800	3.0	65		
56	50	1018	7.2	74	25	1306	4.7	73	16.1	1500	3.7	68	8.9	1768	2.6	64		
70	40	927	5.5	70	20	1183	3.7	67	12.9	1355	2.9	63	7.1	1591	2.0	59		
80	35	896	4.8	69	17.5	1136	3.2	66	11.3	1297	2.5	62	6.3	1518	1.7	57		
100	28	818	3.6	66	14.0	1029	2.4	62	9.0	1169	1.9	58	5.0	1361	1.3	54		

ATTENZIONE!

Per situazioni con velocità di ingresso particolari attenersi alla tabella pagina A2.

I pesi riportati sono indicativi e possono variare in funzione della versione del riduttore.

N.B. Per i riduttori evidenziati dal doppio bordo nella colonna delle potenze è necessario verificare lo scambio termico del riduttore (come nel par. 1.7-A). Per maggiori informazioni contattare l'ufficio tecnico STM.

WARNING!

If in presence of non standard input speed please attain to the page A2.

Listed weights are for reference only and can vary according to the gearbox version.

NOTE. Please pay attention to the frame around the input power value: for this gearboxes it's important to check the thermal capacity (comp. chapter 1.7-A). For details please contact our technical department.

ACHTUNG!

Mit unstandardisierte Antriebsgeschwindigkeit bitte auf Seite A2.

Die angegebenen Gewichte sind Richtwerte und können je nach Getriebeversion etwas variieren.

HINWEIS. Sind in den Tabellen Nennleistungen eingerahmt, so ist die thermische Leistungsgrenze der Getriebe zu beachten (s. S. 1.7-A).
Für weitere Informationen wenden Sie sich bitte and unser technisches Büro.

1.6 Prestazioni riduttori RI

1.6 RI Gearboxes performances

1.6 Leistungen der RI-Getriebe

RI 180

Kg 130

ir	n_1 = 2800 min^{-1}				n_1 = 1400 min^{-1}				n_1 = 900 min^{-1}				n_1 = 500 min^{-1}				RMI	RMI...G
	n_2 min^{-1}	T_{2M} Nm	P kW	RD %	n_2 min^{-1}	T_{2M} Nm	P kW	RD %	n_2 min^{-1}	T_{2M} Nm	P kW	RD %	n_2 min^{-1}	T_{2M} Nm	P kW	RD %	IEC	
7	400	1015	48	89	200	1510	36	89	129	1840	28	88	71	2320	20	86	180-160 132	—
10	280	1190	40	88	140	1650	27	88	90	1990	22	87	50	2470	15.2	85		
15	187	1315	30	86	93	1800	20	86	60	2140	15.8	85	33	2620	11.2	82		
20	140	1515	26	84	70	2037	17.8	84	45	2400	13.6	83	25	2910	9.5	80	160-132	
28	100	1400	18.3	80	50	1870	12.4	79	32	2200	9.6	77	17.9	2660	6.8	73		
40	70	1525	14.9	75	35	2000	9.8	75	23	2330	7.5	73	12.5	2790	5.3	69		
49	57	1600	12.9	74	29	2080	8.4	74	18.4	2415	6.5	72	10.2	2870	4.6	66		
56	50	1630	11.5	74	25	2103	7.5	73	16.1	2423	5.7	71	8.9	2864	4.1	66		
70	40	1482	8.6	72	20	1900	5.9	68	12.9	2182	4.5	66	7.1	2570	3.2	61		
80	35	1424	7.6	69	17.5	1816	5.0	67	11.3	2079	3.8	65	6.3	2440	2.7	59	132	
100	28	1281	5.8	65	14.0	1622	3.8	63	9.0	1850	2.9	61	5.0	2163	2.1	54		

RI 215

Kg 260

ir	n_1 = 2800 min^{-1}				n_1 = 1400 min^{-1}				n_1 = 900 min^{-1}				n_1 = 500 min^{-1}				RMI	RMI...G
	n_2 min^{-1}	T_{2M} Nm	P kW	RD %	n_2 min^{-1}	T_{2M} Nm	P kW	RD %	n_2 min^{-1}	T_{2M} Nm	P kW	RD %	n_2 min^{-1}	T_{2M} Nm	P kW	RD %	IEC	
7*	400	1660	77	90	200	2400	56	90	129	2900	44	89	71	3700	32	86	225-200	—
10*	280	2170	71	89	140	3041	50	89	90	3670	39	88	50	4600	28	85		
15*	187	2400	53	88	93	3300	37	88	60	3900	28	87	33	4800	20	83		
19,5	144	2500	43	87	72	3300	29	86	46	3900	22	85	26	4700	16	81	180-160 132	
28*	100	2400	29	86	50	3200	20	85	32	3200	12,8	84	17,9	4500	11	78		
40*	70	2400	22	81	35	3100	14,4	79	23	3600	11,0	77	12,5	4300	7,9	71		
50*	56	2400	18	78	28	3150	12,2	76	18,0	3650	9,3	74	10,0	4300	6,4	70		
57*	49	2284	15	76	25	2970	10,3	74	15,8	3465	8,1	71	8,8	4125	6,0	63		
69*	41	2400	13	76	20	3100	8,9	74	13,0	3600	6,9	71	7,2	4200	5,1	63		
80*	35	2200	12	70	17,5	2800	7,5	68	11,3	3200	5,9	64	6,3	3800	4,4	57		
100*	28	2150	9,0	70	14,0	2700	5,8	68	9,0	3100	4,6	64	5,0	3600	3,3	57		

RI 250

Kg 460

ir	n_1 = 2800 min^{-1}				n_1 = 1400 min^{-1}				n_1 = 900 min^{-1}				n_1 = 500 min^{-1}				RMI	RMI...G
	n_2 min^{-1}	T_{2M} Nm	P kW	RD %	n_2 min^{-1}	T_{2M} Nm	P kW	RD %	n_2 min^{-1}	T_{2M} Nm	P kW	RD %	n_2 min^{-1}	T_{2M} Nm	P kW	RD %	IEC	
7*	400	2200	102	90	200	3200	74	90	129	4000	61	89	71	5000	43	86	225-200	—
11*	255	3050	91	89	127	4270	64	89	82	5150	50	89	45	6400	36	85		
15*	187	3600	79	89	93	5000	55	89	60	6000	43	88	33	7300	30	84		
20*	140	3500	60	86	70	4800	41	86	45	5700	32	85	25	7000	23	80	180-160 132	
29,5*	95	3600	42	85	47	4800	28	84	31	5700	22	83	16,9	6850	15,6	78		
40*	70	3800	35	80	35	5000	23	79	23	5800	17,7	77	12,5	7000	12,9	71		
49*	57	3800	29	78	29	5000	19,4	77	18,4	5800	14,9	75	10,2	7000	10,8	69		
60*	47	3600	23	77	23	4700	15,1	76	15,0	5500	11,7	74	8,3	6500	8,5	67		
70*	40	3400	20	72	20	4400	13,0	71	12,9	5000	9,9	68	7,1	6000	7,4	61		
79*	35	3000	15,9	70	17,7	3900	10,5	69	11,4	4500	8,0	67	6,3	5300	5,9	60		
98*	29	3000	12,8	70	14,3	3900	8,5	69	9,2	4500	6,5	67	5,1	5300	4,7	60		

* A richiesta / On request / Auf Anfrage

ATTENZIONE!

Per situazioni con velocità di ingresso particolari attenersi alla tabella pagina A2.

I pesi riportati sono indicativi e possono variare in funzione della versione del riduttore.

N.B. Per i riduttori evidenziati dal doppio bordo nella colonna delle potenze è necessario verificare lo scambio termico del riduttore (come nel par. 1.7-A). Per maggiori informazioni contattare l'ufficio tecnico STM.

WARNING!

If in presence of non standard input speed please attain to the page A2.

Listed weights are for reference only and can vary according to the gearbox version.

NOTE. Please pay attention to the frame around the input power value: for this gearboxes it's important to check the thermal capacity (comp. chapter 1.7-A). For details please contact our technical department.

ACHTUNG!

Mit unstandardisierte Antriebsgeschwindigkeit bitte auf Seite A2.

Die angegebenen Gewichte sind Richtwerte und können je nach Getriebeversion etwas variieren.

HINWEIS. Sind in den Tabellen Nennleistungen eingerahmt, so ist die thermische Leistungsgrenze der Getriebe zu beachten (s. S. 1.7-A).
Für weitere Informationen wenden Sie sich bitte and unser technisches Büro.

1.6 Prestazioni riduttori CRI — *1.6 CRI gearboxes performances* — 1.6 Leistungen der CRI-Getriebe

CRI 28/28

Kg 2.8

ir	i_1xi_2	n_1 = 1400 min^{-1}				CRMI	CRMI...G
		n_2 min^{-1}	T_{2M} Nm	P kW	RD %	IEC	
140	7x20	10.0	27	0.05	52	63 - 56	—
200	10x20	7.0	27	0.04	49		
280	10x28	5.0	27	0.03	42		
400	20x20	3.5	27	0.02	44		
600	15x40	2.3	27	0.02	35		
980	49x20	1.4	27	0.01	34	56	
1372	49x28	1.0	27	0.01	28		
1960	49x40	0.71	27	0.01	25		
2800	70x40	0.50	27	0.01	21		
4000	100x40	0.35	27	0.01	17		
5600	100x56	0.25	27	0.01	15		
7000	100x70	0.20	20	0.01	13		
8000	100x80	0.18	16	0.01	11		
10000	100x100	0.14	12	0.01	10		

CRI 28/40

Kg 3.5

ir	i_1xi_2	n_1 = 1400 min^{-1}				CRMI	CRMI...G
		n_2 min^{-1}	T_{2M} Nm	P kW	RD %	IEC	
140	7x20	10.0	64	0.13	51	63 - 56	—
200	10x20	7.0	70	0.10	49		
280	10x28	5.0	70	0.08	43		
400	20x20	3.5	70	0.06	43		
600	15x40	2.3	70	0.05	33		
980	49x20	1.4	70	0.03	32	56	
1372	49x28	1.0	70	0.03	29		
1960	49x40	0.71	70	0.02	24		
2800	70x40	0.50	70	0.02	20		
4000	100x40	0.35	70	0.02	16		
5600	100x56	0.25	65	0.01	14		
7000	100x70	0.20	50	0.01	11		
8000	100x80	0.18	45	0.01	10		
10000	100x100	0.14	35	0.01	11		

CRI 40/40

Kg 4.2

ir	i_1xi_2	n_1 = 1400 min^{-1}				CRMI	CRMI...G
		n_2 min^{-1}	T_{2M} Nm	P kW	RD %	IEC	
140	7x20	10.0	64	0.13	52	71-63-56	71-63-56
200	10x20	7.0	70	0.10	50		
280	10x28	5.0	70	0.08	45		
400	20x20	3.5	70	0.06	44		
600	15x40	2.3	70	0.05	34		
980	49x20	1.4	70	0.03	33	63-56	
1372	49x28	1.0	70	0.03	29		
1960	49x40	0.71	70	0.02	24		
2800	70x40	0.50	70	0.02	19		
4000	100x40	0.35	70	0.01	18		
5600	100x56	0.25	65	0.01	15		
7000	100x70	0.20	50	0.01	12		
8000	100x80	0.18	45	0.01	11		
10000	100x100	0.14	35	0.01	12		

CRI 28/50

Kg 5.2

ir	i_1xi_2	n_1 = 1400 min^{-1}				CRMI	CRMI...G
		n_2 min^{-1}	T_{2M} Nm	P kW	RD %	IEC	
140	7x20	10.0	110	0.21	54	63 - 56	—
200	10x20	7.0	110	0.15	52		
280	10x28	5.0	110	0.13	46		
400	20x20	3.5	110	0.09	46		
600	15x40	2.3	110	0.07	38		
980	49x20	1.4	110	0.05	35	56	
1372	49x28	1.0	110	0.04	30		
1960	49x40	0.71	110	0.03	27		
2800	70x40	0.50	110	0.02	24		
4000	100x40	0.35	110	0.02	19		
5600	100x56	0.25	110	0.02	16		
7000	100x70	0.20	110	0.02	15		
8000	100x80	0.18	75	0.01	12		
10000	100x100	0.14	60	0.01	11		

CRI 40/50

Kg 5.9

ir	i_1xi_2	n_1 = 1400 min^{-1}				CRMI	CRMI...G
		n_2 min^{-1}	T_{2M} Nm	P kW	RD %	IEC	
140	7x20	10.0	110	0.21	56	71-63-56	71-63-56
200	10x20	7.0	110	0.15	53		
280	10x28	5.0	110	0.12	47		
400	20x20	3.5	110	0.09	47		
600	15x40	2.3	110	0.07	39		
980	49x20	1.4	110	0.05	36	63 - 56	
1372	49x28	1.0	110	0.04	30		
1960	49x40	0.71	110	0.03	28		
2800	70x40	0.50	110	0.03	23		
4000	100x40	0.35	110	0.02	21		
5600	100x56	0.25	110	0.02	18		
7000	100x70	0.20	110	0.01	16		
8000	100x80	0.18	75	0.01	14		
10000	100x100	0.14	60	0.01	13		

CRI 28/63

Kg 7.4

ir	i_1xi_2	n_1 = 1400 min^{-1}				CRMI	CRMI...G
		n_2 min^{-1}	T_{2M} Nm	P kW	RD %	IEC	
140	7x20	10.0	207	0.34	56	63 - 56	—
200	10x20	7.0	228	0.31	53		
280	10x28	5.0	250	0.29	46		
400	20x20	3.5	192	0.20	46		
600	15x40	2.3	250	0.16	38		
980	49x20	1.4	189	0.11	35	56	
1372	49x28	1.0	223	0.07	30		
1960	49x40	0.71	223	0.06	27		
2800	70x40	0.50	244	0.06	23		
4000	100x40	0.35	188	0.04	19		
5600	100x56	0.25	230	0.04	16		
7000	100x70	0.20	220	0.03	15		
8000	100x80	0.18	200	0.03	14		
10000	100x100	0.14	140	0.02	12		

I pesi riportati sono indicativi e possono variare in funzione della versione del riduttore.

Listed weights are for reference only and can vary according to the gearbox version.

Die angegebenen Gewichte sind Richtwerte und können sich je nach Getriebeversion ändern.

1.6 Prestazioni riduttori CRI

1.6 CRI gearboxes performances

1.6 Leistungen der CRI-Getriebe

CRI 40/63

Kg 8.1

ir	$i_1 x i_2$	n_1 = 1400 min^{-1}				CRMI	CRMI...G
		n_2 min^{-1}	T_{2M} Nm	P kW	RD %	IEC	
140	7x20	10.0	238	0.44	57	71 - 63 - 56	71 - 63 56
200	10x20	7.0	250	0.34	54		
280	10x28	5.0	250	0.28	47		
400	20x20	3.5	250	0.20	47		
600	15x40	2.3	250	0.16	39		
980	49x20	1.4	250	0.10	36	63 - 56	
1372	49x28	1.0	250	0.09	30		
1960	49x40	0.71	250	0.07	27		
2800	70x40	0.50	250	0.06	22		
4000	100x40	0.35	250	0.04	21		
5600	100x56	0.25	250	0.04	18		
7000	100x70	0.20	220	0.03	16		
8000	100x80	0.18	200	0.02	15		
10000	100x100	0.14	140	0.02	13		

CRI 28/70

Kg 14.4

ir	$i_1 x i_2$	n_1 = 1400 min^{-1}				CRMI	CRMI...G
		n_2 min^{-1}	T_{2M} Nm	P kW	RD %	IEC	
140	7x20	10.0	207	0.34	55	63 - 56	—
200	10x20	7.0	228	0.30	53		
280	10x28	5.0	271	0.28	45		
400	20x20	3.5	192	0.20	46		
600	15x40	2.3	316	0.20	38		
980	49x20	1.4	189	0.11	35	56	
1372	49x28	1.0	223	0.08	29		
1960	49x40	0.71	288	0.08	27		
2800	70x40	0.50	244	0.04	25		
4000	100x40	0.35	188	0.04	18		
5600	100x56	0.25	230	0.05	16		
7000	100x70	0.20	245	0.03	14		
8000	100x80	0.18	256	0.04	13		
10000	100x100	0.14	190	0.02	12		

CRI 40/70

Kg 16.1

ir	$i_1 x i_2$	n_1 = 1400 min^{-1}				CRMI	CRMI...G
		n_2 min^{-1}	T_{2M} Nm	P kW	RD %	IEC	
140	7x20	10.0	266	0.49	56	71 - 63 - 56	71 - 63 56
200	10x20	7.0	290	0.39	54		
280	10x28	5.0	290	0.33	46		
400	20x20	3.5	320	0.25	47		
600	15x40	2.3	316	0.20	39		
980	49x20	1.4	320	0.14	35	63 - 56	
1372	49x28	1.0	320	0.12	30		
1960	49x40	0.71	320	0.09	27		
2800	70x40	0.50	320	0.08	22		
4000	100x40	0.35	320	0.06	20		
5600	100x56	0.25	300	0.04	18		
7000	100x70	0.20	290	0.04	15		
8000	100x80	0.18	270	0.04	14		
10000	100x100	0.14	190	0.02	13		

CRI 50/70

Kg 16.8

ir	$i_1 x i_2$	n_1 = 1400 min^{-1}				CRMI	CRMI...G
		n_2 min^{-1}	T_{2M} Nm	P kW	RD %	IEC	
140	7x20	10.0	266	0.49	57	80 - 71	80 - 71 63
200	10x20	7.0	290	0.39	55		
280	10x28	5.0	290	0.32	47		
400	20x20	3.5	320	0.24	49		
600	15x40	2.3	316	0.19	41		
980	49x20	1.4	320	0.12	39	71 - 63	
1372	49x28	1.0	320	0.10	33		
1960	49x40	0.71	320	0.08	30		
2800	70x40	0.50	320	0.06	26		
4000	100x40	0.35	320	0.05	22		
5600	100x56	0.25	300	0.04	19		
7000	100x70	0.20	290	0.04	16		
8000	100x80	0.18	270	0.03	15		
10000	100x100	0.14	190	0.02	14		

CRI 63/70

Kg 19.0

ir	$i_1 x i_2$	n_1 = 1400 min^{-1}				CRMI	CRMI...G
		n_2 min^{-1}	T_{2M} Nm	P kW	RD %	IEC	
140	7x20	10.0	266	0.49	57	90 - 80 - 71	90 - 80 71
200	10x20	7.0	290	0.38	56		
280	10x28	5.0	290	0.32	47		
400	20x20	3.5	320	0.25	47		
600	15x40	2.3	316	0.19	41		
980	49x20	1.4	320	0.12	40	80 - 71	
1372	49x28	1.0	320	0.10	33		
1960	49x40	0.71	320	0.08	31		
2800	70x40	0.50	320	0.06	27		
4000	100x40	0.35	320	0.05	23		
5600	100x56	0.25	300	0.04	20		
7000	100x70	0.20	290	0.04	17		
8000	100x80	0.18	270	0.03	16		
10000	100x100	0.14	190	0.02	15		

CRI 40/85

Kg 20

ir	$i_1 x i_2$	n_1 = 1400 min^{-1}				CRMI	CRMI...G
		n_2 min^{-1}	T_{2M} Nm	P kW	RD %	IEC	
140	7x20	10.0	500	0.89	59	71 - 63 - 56	71 - 63 56
200	10x20	7.0	500	0.66	56		
280	10x28	5.0	500	0.57	46		
400	20x20	3.5	500	0.37	49		
600	15x40	2.3	500	0.31	40		
980	49x20	1.4	500	0.20	37	63 - 56	
1372	49x28	1.0	500	0.18	29		
1960	49x40	0.71	500	0.14	27		
2800	70x40	0.50	500	0.12	22		
4000	100x40	0.35	500	0.09	21		
5600	100x56	0.25	500	0.07	19		
7000	100x70	0.20	460	0.06	17		
8000	100x80	0.18	460	0.05	16		
10000	100x100	0.14	350	0.04	14		

I pesi riportati sono indicativi e possono variare in funzione della versione del riduttore.

Listed weights are for reference only and can vary according to the gearbox version.

Die angegebenen Gewichte sind Richtwerte und können sich je nach Getriebeversion ändern.

1.6 Prestazioni riduttori CRI

1.6 CRI gearboxes performances

1.6 Leistungen der CRI-Getriebe

CRI 50/85

Kg 22

ir	i_1xi_2	n_1 = 1400 min^{-1}				CRMI	CRMI...G
		n_2 min^{-1}	T_{2M} Nm	P kW	RD %	IEC	
140	7x20	10.0	500	0.88	60	80 - 71	80 - 71 63
200	10x20	7.0	500	0.65	57		
280	10x28	5.0	500	0.56	47		
400	20x20	3.5	500	0.36	51		
600	15x40	2.3	500	0.29	42		
980	49x20	1.4	500	0.18	41	71 - 63	
1372	49x28	1.0	500	0.17	32		
1960	49x40	0.71	500	0.12	30		
2800	70x40	0.50	500	0.10	26		
4000	100x40	0.35	500	0.08	22		
5600	100x56	0.25	500	0.06	21		
7000	100x70	0.20	460	0.05	18		
8000	100x80	0.18	460	0.05	17		
10000	100x100	0.14	350	0.04	14		

CRI 63/85

Kg 24

ir	i_1xi_2	n_1 = 1400 min^{-1}				CRMI	CRMI...G
		n_2 min^{-1}	T_{2M} Nm	P kW	RD %	IEC	
140	7x20	10.0	500	0.88	60	90 - 80 - 71	90 - 80 71
200	10x20	7.0	500	0.64	57		
280	10x28	5.0	500	0.55	47		
400	20x20	3.5	500	0.35	52		
600	15x40	2.3	500	0.29	42		
980	49x20	1.4	500	0.18	42	71 - 80	
1372	49x28	1.0	500	0.16	33		
1960	49x40	0.71	500	0.12	31		
2800	70x40	0.50	500	0.10	27		
4000	100x40	0.35	500	0.08	23		
5600	100x56	0.25	500	0.06	22		
7000	100x70	0.20	460	0.05	19		
8000	100x80	0.18	460	0.05	18		
10000	100x100	0.14	350	0.03	15		

CRI 70/85

Kg 31

ir	i_1xi_2	n_1 = 1400 min^{-1}				CRMI	CRMI...G
		n_2 min^{-1}	T_{2M} Nm	P kW	RD %	IEC	
140	7x20	10.0	500	0.87	60	100-90-80	—
200	10x20	7.0	500	0.64	57		
280	10x28	5.0	500	0.55	47		
400	20x20	3.5	500	0.36	52	90 - 80	
600	15x40	2.3	500	0.29	42	100-90-80	
980	49x20	1.4	500	0.18	42	80 - 71	
1372	49x28	1.0	500	0.16	33		
1960	49x40	0.71	500	0.12	31		
2800	70x40	0.50	500	0.10	27		
4000	100x40	0.35	500	0.08	23		
5600	100x56	0.25	500	0.06	22		
7000	100x70	0.20	460	0.05	19		
8000	100x80	0.18	460	0.05	18		
10000	100x100	0.14	350	0.03	15		

CRI 50/110

Kg 42

ir	i_1xi_2	n_1 = 1400 min^{-1}				CRMI	CRMI...G
		n_2 min^{-1}	T_{2M} Nm	P kW	RD %	IEC	
140	7x20	10.0	1000	1.7	60	80 - 71	80 - 71 - 63
200	10x20	7.0	1000	1.3	58		
280	10x28	5.0	1000	1.0	50		
400	20x20	3.5	1000	0.71	52		
600	15x40	2.3	1000	0.56	44		
980	49x20	1.4	1000	0.37	41	71 - 63	
1372	49x28	1.0	1000	0.31	34		
1960	49x40	0.71	1000	0.24	32		
2800	70x40	0.50	1000	0.19	27		
4000	100x40	0.35	1000	0.16	23		
5600	100x56	0.25	1000	0.12	21		
7000	100x70	0.20	960	0.11	19		
8000	100x80	0.18	860	0.09	18		
10000	100x100	0.14	700	0.06	16		

CRI 63/110

Kg 44

ir	i_1xi_2	n_1 = 1400 min^{-1}				CRMI	CRMI...G
		n_2 min^{-1}	T_{2M} Nm	P kW	RD %	IEC	
140	7x20	10.0	1000	1.7	60	90 - 80 - 71	90 - 80 71
200	10x20	7.0	1000	1.2	59		
280	10x28	5.0	1000	1.0	51		
400	20x20	3.5	1000	0.70	52		
600	15x40	2.3	1000	0.56	44		
980	49x20	1.4	1000	0.36	42	80 - 71	
1372	49x28	1.0	1000	0.31	35		
1960	49x40	0.71	1000	0.23	32		
2800	70x40	0.50	1000	0.18	28		
4000	100x40	0.35	1000	0.15	24		
5600	100x56	0.25	1000	0.12	22		
7000	100x70	0.20	960	0.10	20		
8000	100x80	0.18	860	0.08	19		
10000	100x100	0.14	700	0.06	17		

CRI 70/110

Kg 51

ir	i_1xi_2	n_1 = 1400 min^{-1}				CRMI	CRMI...G
		n_2 min^{-1}	T_{2M} Nm	P kW	RD %	IEC	
140	7x20	10.0	1000	1.7	61	100-90-80	—
200	10x20	7.0	1000	1.2	59		
280	10x28	5.0	1000	1.0	51		
400	20x20	3.5	1000	0.70	52	90 - 80	
600	15x40	2.3	1000	0.56	44	100-90-80	
980	49x20	1.4	1000	0.36	42	80 - 71	
1372	49x28	1.0	1000	0.31	35		
1960	49x40	0.71	1000	0.23	32		
2800	70x40	0.50	1000	0.19	28		
4000	100x40	0.35	1000	0.15	24		
5600	100x56	0.25	1000	0.12	22		
7000	100x70	0.20	960	0.10	20		
8000	100x80	0.18	860	0.08	19		
10000	100x100	0.14	700	0.06	17		

I pesi riportati sono indicativi e possono variare in funzione della versione del riduttore.

Listed weights are for reference only and can vary according to the gearbox version.

Die angegebenen Gewichte sind Richtwerte und können sich je nach Getriebeversion ändern.

1.6 Prestazioni riduttori CRI

1.6 CRI gearboxes performances

1.6 Leistungen der CRI-Getriebe

CRI 85/110

Kg 56

ir	i_1xi_2	n_1 = 1400 min^{-1}				CRMI	CRMI...G
		n_2 min^{-1}	T_{2M} Nm	P kW	RD %	IEC	
140	7x20	10.0	1000	1.7	61	112-100 90	—
200	10x20	7.0	1000	1.2	60		
280	10x28	5.0	1000	1.0	51		
400	20x20	3.5	1000	0.68	54		
600	15x40	2.3	1000	0.55	45		
980	49x20	1.4	1000	0.35	42	90 - 80	
1372	49x28	1.0	1000	0.30	35		
1960	49x40	0.71	1000	0.23	33		
2800	70x40	0.50	1000	0.18	30		
4000	100x40	0.35	1000	0.14	25		
5600	100x56	0.25	1000	0.11	23		
7000	100x70	0.20	960	0.10	21		
8000	100x80	0.18	860	0.08	20		
10000	100x100	0.14	700	0.06	17		

CRI 63/130

Kg 54

ir	i_1xi_2	n_1 = 1400 min^{-1}				CRMI	CRMI...G
		n_2 min^{-1}	T_{2M} Nm	P kW	RD %	IEC	
140	7x20	10.0	1660	2.8	61	90 - 80 - 71	90 - 80 71
200	10x20	7.0	1800	2.2	59		
280	10x28	5.0	1600	1.7	51		
400	20x20	3.5	1800	1.3	51		
600	15x40	2.3	1800	1.0	43		
980	49x20	1.4	1800	0.64	42	80 - 71	
1372	49x28	1.0	1800	0.56	35		
1960	49x40	0.71	1800	0.42	32		
2800	70x40	0.50	1800	0.34	28		
4000	100x40	0.35	1800	0.28	24		
5600	100x56	0.25	1700	0.19	23		
7000	100x70	0.20	1700	0.17	20		
8000	100x80	0.18	1600	0.15	20		
10000	100x100	0.14	1250	0.11	17		

CRI 70/130

Kg 61

ir	i_1xi_2	n_1 = 1400 min^{-1}				CRMI	CRMI...G
		n_2 min^{-1}	T_{2M} Nm	P kW	RD %	IEC	
140	7x20	10.0	1660	2.8	62	100-90-80	—
200	10x20	7.0	1800	2.2	59		
280	10x28	5.0	1600	1.7	51		
400	20x20	3.5	1800	1.2	53	90 - 80	
600	15x40	2.3	1800	1.0	43	100-90-80	
980	49x20	1.4	1800	0.64	42	80 - 71	
1372	49x28	1.0	1800	0.56	35		
1960	49x40	0.71	1800	0.42	32		
2800	70x40	0.50	1800	0.34	27		
4000	100x40	0.35	1800	0.28	24		
5600	100x56	0.25	1700	0.19	23		
7000	100x70	0.20	1700	0.17	20		
8000	100x80	0.18	1600	0.15	20		
10000	100x100	0.14	1250	0.11	17		

CRI 85/130

Kg 66

ir	i_1xi_2	n_1 = 1400 min^{-1}				CRMI	CRMI...G
		n_2 min^{-1}	T_{2M} Nm	P kW	RD %	IEC	
140	7x20	10.0	1660	2.8	62	112-100 90	—
200	10x20	7.0	1800	2.2	60		
280	10x28	5.0	1600	1.6	51		
400	20x20	3.5	1800	1.2	55		
600	15x40	2.3	1800	1.0	44		
980	49x20	1.4	1800	0.63	43	90 - 80	
1372	49x28	1.0	1800	0.55	35		
1960	49x40	0.71	1800	0.41	33		
2800	70x40	0.50	1800	0.32	29		
4000	100x40	0.35	1800	0.26	25		
5600	100x56	0.25	1700	0.19	24		
7000	100x70	0.20	1700	0.17	21		
8000	100x80	0.18	1600	0.14	21		
10000	100x100	0.14	1250	0.10	18		

CRI 85/150

Kg 95

ir	i_1xi_2	n_1 = 1400 min^{-1}				CRMI	CRMI...G
		n_2 min^{-1}	T_{2M} Nm	P kW	RD %	IEC	
140	7x20	10.0	2620	4.3	64	112-100 90	—
200	10x20	7.0	2850	3.4	61		
280	10x28	5.0	2510	2.5	53		
400	20x20	3.5	2900	1.9	55		
600	15x40	2.3	2880	1.6	45		
980	49x20	1.4	2900	0.98	44	90 - 80	
1372	49x28	1.0	2900	0.84	37		
1960	49x40	0.71	2900	0.64	34		
2800	70x40	0.50	2900	0.50	31		
4000	100x40	0.35	2900	0.42	25		
5600	100x56	0.25	2900	0.30	25		
7000	100x70	0.20	2600	0.25	22		
8000	100x80	0.18	2600	0.23	21		
10000	100x100	0.14	1950	0.15	19		

CRI 110/150

Kg 115

ir	i_1xi_2	n_1 = 1400 min^{-1}				CRMI	CRMI..G
		n_2 min^{-1}	T_{2M} Nm	P kW	RD %	IEC	
140	7x20	10.0	2620	4.3	65	132-112-100	—
200	10x20	7.0	2850	3.4	62		
280	10x28	5.0	2510	2.5	54		
400	20x20	3.5	2900	1.9	57	112-100	
600	15x40	2.3	2880	1.5	46	132-112-100	
980	49x20	1.4	2900	0.92	47	112-100-90	
1372	49x28	1.0	2900	0.79	39		
1960	49x40	0.71	2900	0.60	36		
2800	70x40	0.50	2900	0.47	32		
4000	100x40	0.35	2900	0.39	27		
5600	100x56	0.25	2900	0.28	27		
7000	100x70	0.20	2600	0.23	23		
8000	100x80	0.18	2600	0.21	22		
10000	100x100	0.14	1950	0.14	21		

I pesi riportati sono indicativi e possono variare in funzione della versione del riduttore.

Listed weights are for reference only and can vary according to the gearbox version.

Die angegebenen Gewichte sind Richtwerte und können sich je nach Getriebeversion ändern.

1.6 Prestazioni riduttori CRI — *1.6 CRI gearboxes performances* — 1.6 Leistungen der CRI-Getriebe

CRI 85/180

Kg 148

ir	i_1xi_2	n_1 = 1400 min^{-1}				CRMI	CRMI...G
		n_2 min^{-1}	T_{2M} Nm	P kW	RD %	IEC	
140	7x20	10.0	3750	6.1	65	112-100 90	—
200	10x20	7.0	4095	4.8	62		
280	10x28	5.0	3700	3.5	55		
400	20x20	3.5	4400	3.0	56		
600	15x40	2.3	4160	2.2	46		
980	49x20	1.4	3850	1.6	44	90 - 80	
1372	49x28	1.0	4600	1.3	38		
1960	49x40	0.71	4600	1.0	34		
2800	70x40	0.50	4600	0.79	31		
4000	100x40	0.35	4250	0.62	26		
5600	100x56	0.25	4600	0.48	25		
7000	100x70	0.20	4600	0.44	22		
8000	100x80	0.18	4200	0.37	21		
10000	100x100	0.14	3300	0.26	19		

CRI 110/180

Kg 168

ir	i_1xi_2	n_1 = 1400 min^{-1}				CRMI	CRMI...G
		n_2 min^{-1}	T_{2M} Nm	P kW	RD %	IEC	
140	7x20	10.0	3750	6.0	65	132-112-100	—
200	10x20	7.0	4095	4.8	63		
280	10x28	5.0	3700	3.5	55		
400	20x20	3.5	4600	2.9	58	112-100	
600	15x40	2.3	4160	2.2	47	132-112-100	
980	49x20	1.4	4600	1.5	47	112-100-90	
1372	49x28	1.0	4600	1.2	40		
1960	49x40	0.71	4600	0.96	36		
2800	70x40	0.50	4600	0.75	32		
4000	100x40	0.35	4600	0.60	28		
5600	100x56	0.25	4600	0.45	27		
7000	100x70	0.20	4600	0.41	23		
8000	100x80	0.18	4200	0.35	22		
10000	100x100	0.14	3300	0.24	20		

B

CRI 130/180

Kg 178

ir	i_1xi_2	n_1 = 1400 min^{-1}				CRMI	CRMI...G
		n_2 min^{-1}	T_{2M} Nm	P kW	RD %	IEC	
140	7x20	10.0	3750	5.9	67	132-112-100	—
200	10x20	7.0	4095	4.7	64		
280	10x28	5.0	3700	3.4	57		
400	20x20	3.5	4600	2.9	59		
600	15x40	2.3	4160	2.1	48		
980	49x20	1.4	4600	1.4	48	112-100	
1372	49x28	1.0	4600	1.2	41		
1960	49x40	0.71	4600	0.95	36		
2800	70x40	0.50	4600	0.72	34		
4000	100x40	0.35	4600	0.58	29		
5600	100x56	0.25	4600	0.43	28		
7000	100x70	0.20	4600	0.40	24		
8000	100x80	0.18	4200	0.33	23		
10000	100x100	0.14	3300	0.23	21		

CRI 110/215

Kg 298

ir	i_1xi_2	n_1 = 1400 min^{-1}				CRMI	CRMI...G
		n_2 min^{-1}	T_{2M} Nm	P kW	RD %	IEC	
136,5*	7X19,5	10,3	6115	9,8	67	132-112-100	—
195*	10X19,5	7,2	6624	7,7	65		
293*	15X19,5	4,8	7203	5,9	61		
390*	20X19,5	3,6	7200	4,5	60	112-100	
600*	15X40	2,3	6346	3,0	51	132-112-100	
956*	49X19,5	1,5	7200	2,3	48	112-100-90	
1372*	49X28	1,0	7200	1,7	47		
1960*	49X40	0,71	7200	1,4	39		
2800*	70X40	0,50	7200	1,1	35		
4000*	100X40	0,35	7200	0,86	31		
5700*	100X57	0,25	7200	0,69	27		
6900*	100X69	0,20	7200	0,57	27		
8000*	100X80	0,18	6800	0,58	22		
10000*	100X100	0,14	5700	0,37	23		

CRI 130/250

Kg 508

ir	i_1xi_2	n_1 = 1400 min^{-1}				CRMI	CRMI...G
		n_2 min^{-1}	T_{2M} Nm	P kW	RD %	IEC	
140*	7X20	10,0	9008	14,5	65	132-112-100	—
200*	10X20	7,0	9773	12,0	60		
300*	15X20	4,7	10500	8,4	61		
400*	20X20	3,5	10500	7,2	53		
600*	15X40	2,3	10322	5,5	46		
980*	49X20	1,4	10500	3,3	48	112-100	
1446*	49X29,5	1,0	10500	2,6	41		
1960*	49X40	0,71	10500	2,0	39		
2800*	70X40	0,50	10500	1,4	38		
4000*	100X40	0,35	10500	1,2	31		
6000*	100X60	0,23	10500	1,1	23		
7000*	100X70	0,20	10500	0,88	25		
7900*	100X79	0,18	9000	0,67	25		
9800*	100X98	0,14	9000	0,59	23		

* A richiesta / On request / Auf Anfrage

I pesi riportati sono indicativi e possono variare in funzione della versione del riduttore.

Listed weights are for reference only and can vary according to the gearbox version.

Die angegebenen Gewichte sind Richtwerte und können sich je nach Getriebeversion ändern.

1.6 Prestazioni riduttori CR — *1.6 CR gearboxes performances* — 1.6 Leistungen der CR-Getriebe

CR 40

Kg 3.5

ir	i_1xi_2	n_1 = 2800 min^{-1}				n_1 = 1400 min^{-1}				n_1 = 900 min^{-1}				n_1 = 500 min^{-1}				IEC
		n_2 min^{-1}	T_{2M} Nm	P kW	RD %	n_2 min^{-1}	T_{2M} Nm	P kW	RD %	n_2 min^{-1}	T_{2M} Nm	P kW	RD %	n_2 min^{-1}	T_{2M} Nm	P kW	RD %	
44.3	2.9x15	63	49	0.43	75	32	59	0.27	73	20	65	0.19	71	11.3	70	0.12	69	
50.5	3.4X15	55	49	0.38	75	28	59	0.23	73	17.8	65	0.17	71	9.9	70	0.11	68	
58.2	3.9X15	48	52	0.35	75	24	65	0.23	71	15.5	70	0.16	69	8.6	70	0.09	68	
68.0	4.5X15	41	56	0.32	74	21	65	0.20	71	13.2	70	0.14	69	7.4	70	0.08	66	
82.7	3.0X28	34	50	0.28	64	16.9	59	0.17	61	10.9	65	0.13	59	6.0	70	0.08	56	
108.7	3.9X28	26	52	0.22	63	12.9	65	0.15	59	8.3	70	0.11	56	4.6	70	0.06	55	63
126.9	4.5X28	22	56	0.21	62	11.0	65	0.13	59	7.1	70	0.09	56	3.9	70	0.06	52	
165.1	3.4X49	17.0	43	0.14	53	8.5	50	0.09	49	5.5	56	0.07	45	3.0	65	0.05	43	56
222.1	4.5X49	12.6	48	0.12	51	6.3	56	0.08	47	4.1	61	0.06	44	2.3	70	0.04	41	
295.2	3.0X100	9.5	30	0.07	41	4.7	31	0.04	38	3.0	33	0.03	36	1.7	34	0.02	34	
336.8	3.4X100	8.3	30	0.06	41	4.2	31	0.04	38	2.7	33	0.03	35	1.5	35	0.02	33	
388.2	3.9X100	7.2	30	0.06	41	3.6	33	0.03	36	2.3	34	0.02	34	1.3	35	0.01	33	
453.0	4.5X100	6.2	31	0.05	40	3.1	33	0.03	36	2.0	34	0.02	33	1.1	35	0.01	31	

CR 50

Kg 5

ir	i_1xi_2	n_1 = 2800 min^{-1}				n_1 = 1400 min^{-1}				n_1 = 900 min^{-1}				n_1 = 500 min^{-1}				IEC
		n_2 min^{-1}	T_{2M} Nm	P kW	RD %	n_2 min^{-1}	T_{2M} Nm	P kW	RD %	n_2 min^{-1}	T_{2M} Nm	P kW	RD %	n_2 min^{-1}	T_{2M} Nm	P kW	RD %	
48.3	3.2x15	58	89	0.68	79	29	106	0.42	77	18.6	108	0.28	75	10.4	110	0.16	73	
52.1	3.5X15	54	94	0.67	79	27	108	0.40	76	17.3	110	0.27	74	9.6	110	0.15	73	
61.0	4.1X15	46	94	0.57	79	23	108	0.34	76	14.8	110	0.23	74	8.2	110	0.13	73	
73.3	2.6X28	38	92	0.55	67	19.1	109	0.34	64	12.3	110	0.23	62	6.8	110	0.13	59	
90.2	3.2X28	31	92	0.45	67	15.5	109	0.28	64	10.0	110	0.19	59	5.5	110	0.11	58	
97.2	3.5X28	29	97	0.44	66	14.4	110	0.27	62	9.3	110	0.18	59	5.1	110	0.10	58	71
113.9	4.1X28	25	97	0.38	66	12.3	110	0.23	62	7.9	110	0.15	59	4.4	110	0.09	58	
170.1	3.5X49	16.5	86	0.26	58	8.2	103	0.17	53	5.3	110	0.12	50	2.9	110	0.07	49	63
199.3	4.1X49	14.0	86	0.22	58	7.0	103	0.14	53	4.5	110	0.10	50	2.5	110	0.06	49	56
261.9	2.6X100	10.7	59	0.15	44	5.3	60	0.08	40	3.4	60	0.06	38	1.9	60	0.03	35	
289.5	5.9x49	9.7	96	0.21	47	4.8	110	0.11	50	3.1	110	0.07	49	1.7	110	0.04	47	
347.0	3.5X100	8.1	60	0.12	43	4.0	60	0.07	38	2.6	60	0.05	35	1.4	60	0.03	34	
406.7	4.1X100	6.9	60	0.10	43	3.4	60	0.06	38	2.2	60	0.04	35	1.2	60	0.02	34	
590.9	5.9x100	4.7	60	0.07	40	2.4	60	0.04	35	1.5	60	0.03	34	0.8	60	0.02	32	

CR 70

Kg 16

ir	i_1xi_2	n_1 = 2800 min^{-1}				n_1 = 1400 min^{-1}				n_1 = 900 min^{-1}				n_1 = 500 min^{-1}				IEC
		n_2 min^{-1}	T_{2M} Nm	P kW	RD %	n_2 min^{-1}	T_{2M} Nm	P kW	RD %	n_2 min^{-1}	T_{2M} Nm	P kW	RD %	n_2 min^{-1}	T_{2M} Nm	P kW	RD %	
44.3	2.95x15	63	170	1.4	78	32	205	0.89	76	20	234	0.67	74	11.3	263	0.43	72	
50.8	3.4X15	55	170	1.3	78	28	205	0.78	76	17.7	234	0.59	73	9.8	290	0.43	70	
59.1	3.9X15	47	181	1.2	78	24	234	0.78	74	15.2	263	0.58	72	8.5	290	0.37	70	
69.6	4.6X15	40	193	1.1	77	20	234	0.67	74	12.9	263	0.49	72	7.2	312	0.34	69	
82.6	2.95X28	34	170	0.89	68	16.9	202	0.56	64	10.9	228	0.42	62	6.1	254	0.27	59	
110.3	3.9X28	25	180	0.71	67	12.7	228	0.49	62	8.2	254	0.37	59	4.5	290	0.24	57	90
130.0	4.6X28	22	191	0.66	66	10.8	228	0.42	62	6.9	254	0.31	59	3.8	298	0.22	55	80
166.1	3.4X49	16.9	190	0.56	60	8.4	223	0.35	56	5.4	250	0.28	51	3.0	290	0.19	48	
227.5	4.6X49	12.3	212	0.48	57	6.2	250	0.30	53	4.0	276	0.23	50	2.2	320	0.16	46	71
295.0	2.95x100	9.5	144	0.30	47	4.7	166	0.19	43	3.1	175	0.14	40	1.7	183	0.09	37	63
302.9	6.2X49	9.2	223	0.42	51	4.6	276	0.27	49	3.0	290	0.19	47	1.7	320	0.12	46	
338.9	3.4X100	8.3	144	0.27	47	4.1	166	0.17	43	2.7	175	0.13	38	1.5	188	0.08	36	
393.8	3.9X100	7.1	151	0.24	46	3.6	175	0.16	40	2.3	183	0.12	37	1.3	188	0.07	36	
464.3	4.6X100	6.3	159	0.23	45	3.1	175	0.14	40	2.0	183	0.10	37	1.1	190	0.07	34	
618.2	6.2x100	4.5	166	0.18	43	2.3	183	0.12	36	1.5	188	0.08	35	0.8	190	0.05	34	

I pesi riportati sono indicativi e possono variare in funzione della versione del

Listed weights are for reference only and can vary according to the gearbox version.

Die angegebenen Gewichte sind Richtwerte und können je nach Getriebe-

1.6 Prestazioni riduttori CR — *16 CR gearboxes performances* — 1.6 Leistungen der CR-Getriebe

CR 85

Kg 36

ir	i_1xi_2	n_1 = 2800 min^{-1}				n_1 = 1400 min^{-1}				n_1 = 900 min^{-1}				n_1 = 500 min^{-1}				IEC
		n_2 min^{-1}	T_{2M} Nm	P kW	RD %	n_2 min^{-1}	T_{2M} Nm	P kW	RD %	n_2 min^{-1}	T_{2M} Nm	P kW	RD %	n_2 min^{-1}	T_{2M} Nm	P kW	RD %	
43.0	2.9x15	65	333	2.9	79	33	403	1.8	77	21	452	1.3	75	11.6	500	0.83	73	
51.3	3.4X15	55	333	2.4	79	27	403	1.5	77	17.5	500	1.3	73	9.7	500	0.72	71	
59.1	3.9X15	47	354	2.2	79	24	452	1.5	75	15.2	500	1.1	73	8.5	500	0.62	71	
69.0	4.6X15	41	379	2.1	78	20	452	1.3	75	13.0	500	0.94	73	7.2	500	0.55	69	
80.2	2.9X28	35	319	1.7	69	17.5	381	1.1	65	11.2	431	0.82	62	6.2	480	0.53	59	90
110.4	3.9X28	25	338	1.3	68	12.7	431	0.92	62	8.2	480	0.69	59	4.5	500	0.42	57	80
128.8	4.6X28	22	360	1.2	67	10.9	431	0.79	62	7.0	480	0.60	59	3.9	500	0.37	55	
167.6	3.4X49	16.7	329	0.93	62	8.4	387	0.58	58	5.4	480	0.52	52	3.0	500	0.31	50	71
225.4	4.6X49	12.4	347	0.69	60	6.2	434	0.51	55	4.0	480	0.39	52	2.2	500	0.24	48	63
286.4	2.9X100	9.8	243	0.50	50	4.9	281	0.33	44	3.1	304	0.24	42	1.7	327	0.15	39	
342.1	3.4X100	8.2	243	0.42	50	4.1	281	0.27	44	2.6	327	0.23	39	1.5	337	0.14	37	
394.1	3.9X100	7.1	255	0.40	48	3.6	304	0.27	42	2.3	327	0.20	39	1.3	337	0.12	37	
460.0	4.6X100	6.1	268	0.37	46	3.0	304	0.23	42	2.0	327	0.17	39	1.1	350	0.11	35	

CR 110

Kg 50

ir	i_1xi_2	n_1 = 2800 min^{-1}				n_1 = 1400 min^{-1}				n_1 = 900 min^{-1}				n_1 = 500 min^{-1}				IEC
		n_2 min^{-1}	T_{2M} Nm	P kW	RD %	n_2 min^{-1}	T_{2M} Nm	P kW	RD %	n_2 min^{-1}	T_{2M} Nm	P kW	RD %	n_2 min^{-1}	T_{2M} Nm	P kW	RD %	
43.0	2.9x15	65	632	5.4	80	33	769	3.4	78	21	880	2.5	76	11.6	990	1.6	74	
51.3	3.4X15	55	632	4.5	80	27	769	2.8	78	17.5	990	2.5	74	9.7	1000	1.4	72	
59.1	3.9X15	47	674	4.2	80	24	880	2.9	76	15.2	990	2.1	74	8.5	1000	1.2	72	
69.0	4.6X15	41	722	3.9	79	20	880	2.5	76	13.0	990	1.8	74	7.2	1000	1.1	70	
80.2	2.9X28	35	665	3.4	72	17.5	796	2.1	69	11.2	898	1.6	66	6.2	1000	1.0	63	112
110.4	3.9X28	25	705	2.6	72	12.7	898	1.8	66	8.2	1000	1.4	63	4.5	1000	0.78	61	100
128.8	4.6X28	22	751	2.4	71	10.9	898	1.5	66	7.0	1000	1.2	63	3.9	1000	0.70	58	
167.6	3.4X49	16.7	667	1.8	66	8.4	786	1.1	62	5.4	976	0.98	56	3.0	1000	0.59	53	90
225.4	4.6X49	12.4	745	1.5	64	6.2	881	0.97	59	4.0	976	0.73	56	2.2	1000	0.46	51	80
286.4	2.9X100	9.8	503	0.97	53	4.9	583	0.61	49	3.1	617	0.42	48	1.7	650	0.28	42	
342.1	3.4X100	8.2	503	0.81	53	4.1	583	0.51	49	2.6	650	0.43	42	1.5	670	0.26	40	
394.1	3.9X100	7.1	528	0.76	52	3.6	617	0.48	48	2.3	650	0.37	42	1.3	670	0.22	40	
460.0	4.6X100	6.1	556	0.70	51	3.0	617	0.42	47	2.0	650	0.32	42	1.1	700	0.21	38	

CR 130

Kg 67

ir	i_1xi_2	n_1 = 2800 min^{-1}				n_1 = 1400 min^{-1}				n_1 = 900 min^{-1}				n_1 = 500 min^{-1}				IEC
		n_2 min^{-1}	T_{2M} Nm	P kW	RD %	n_2 min^{-1}	T_{2M} Nm	P kW	RD %	n_2 min^{-1}	T_{2M} Nm	P kW	RD %	n_2 min^{-1}	T_{2M} Nm	P kW	RD %	
40,4	5,77x7	69	1110	10,1	80	35	1372	6,4	78	22	1540	4,7	77	12,4	1800	3,1	76	
50,4	7,2x7	56	1194	8,7	79	28	1456	5,5	78	17,9	1624	4,0	77	9,9	1800	2,5	75	180
57,7	5,77x10	49	1196	7,7	79	24	1455	4,8	77	15,6	1621	3,5	76	8,7	1800	2,2	74	
72,0	7,2x10	39	1279	6,7	78	19,4	1538	4,1	76	12,5	1704	3,0	75	6,9	1800	1,8	73	160
85,3	4,26x20	33	1200	5,6	74	16,4	1445	3,5	72	10,6	1602	2,5	70	5,9	1810	1,6	68	
115,4	5,77x20	24	1307	4,5	73	12,1	1553	2,8	71	7,8	1709	2,0	69	4,3	1800	1,2	67	132
144,0	7,2x20	19,4	1386	3,9	72	9,7	1631	2,4	70	6,3	1788	1,7	68	3,5	1800	1,0	66	112
161,5	5,77x28	17,3	1158	3,2	65	8,7	1387	2,0	62	5,6	1534	1,5	59	3,1	1800	1,0	57	
201,6	7,2x28	13,9	1231	2,8	64	6,9	1461	1,8	61	4,5	1607	1,3	58	2,5	1800	0,84	56	100
230,8	5,77x40	12,1	1262	2,6	62	6,1	1493	1,6	58	3,9	1641	1,2	56	2,2	1800	0,77	53	90
288,0	7,2x40	9,7	1336	2,2	61	4,9	1567	1,4	57	3,1	1715	1,0	55	1,7	1800	0,63	52	
323,1	5,77x56	8,7	1100	1,7	59	4,3	1299	1,1	56	2,8	1426	0,78	53	1,5	1700	0,55	50	80
403,2	7,2x56	6,9	1163	1,5	58	3,5	1363	0,91	54	2,2	1490	0,67	52	1,2	1700	0,45	49	71
504,0	7,2x70	5,6	1161	1,3	54	2,8	1347	0,78	50	1,8	1465	0,57	48	1,0	1700	0,39	45	
576,0	7,2x80	4,9	1105	1,1	52	2,4	1281	0,67	49	1,6	1393	0,49	47	0,87	1600	0,33	44	63
720,0	7,2x100	3,9	967	0,83	48	1,9	1113	0,51	44	1,3	1206	0,38	42	0,69	1250	0,23	39	

I pesi riportati sono indicativi e possono variare in funzione della versione del

Listed weights are for reference only and can vary according to the gearbox version.

Die angegebenen Gewichte sind Richtwerte und können je nach Getriebe-

1.6 Prestazioni riduttori CR — *16 CR gearboxes performances* — 1.6 Leistungen der CR-Getriebe

CR 150

Kg 98

ir	i_1xi_2	n_1 = 2800 min^{-1}				n_1 = 1400 min^{-1}				n_1 = 900 min^{-1}				n_1 = 500 min^{-1}				IEC
		n_2	T_{2M}	P	RD	n_2	T_{2M}	P	RD	n_2	T_{2M}	P	RD	n_2	T_{2M}	P	RD	
		min^{-1}	Nm	kW	%	min^{-1}	Nm	kW	%	min^{-1}	Nm	kW	%	min^{-1}	Nm	kW	%	
40,4	5,77x7	69	1689	15,2	81	35	2091	9,6	79	22	2348	7,0	78	12,4	2900	4,9	76	
50,4	7,2x7	56	1818	13,2	80	28	2220	8,2	78	17,9	2476	6,0	77	9,9	2900	4,0	76	
57,7	5,77x10	49	1807	11,6	79	24	2212	7,3	77	15,6	2471	5,3	76	8,7	2900	3,5	74	180
72,0	7,2x10	39	1936	10,0	79	19,4	2342	6,2	77	12,5	2600	4,5	75	6,9	2900	2,9	74	160
85,3	4,26x20	33	1888	8,6	76	16,4	2287	5,4	73	10,6	2541	3,9	72	5,9	2879	2,5	69	132
115,4	5,77x20	24	2062	7,0	75	12,1	2461	4,3	72	7,8	2715	3,1	70	4,3	2900	1,9	68	112
144,0	7,2x20	19,4	2190	6,0	74	9,7	2589	3,7	71	6,3	2843	2,7	70	3,5	2900	1,6	68	100
161,5	5,77x28	17,3	1848	5,0	67	8,7	2214	3,2	63	5,6	2448	2,3	61	3,1	2900	1,6	59	90
201,6	7,2x28	13,9	1965	4,4	66	6,9	2332	2,7	62	4,5	2565	2,0	60	2,5	2900	1,3	58	80
230,8	5,77x40	12,1	1980	4,0	64	6,1	2353	2,5	60	3,9	2591	1,8	58	2,2	2900	1,2	55	71
288,0	7,2x40	9,7	2099	3,4	62	4,9	2472	2,1	59	3,1	2710	1,6	57	1,7	2900	0,98	54	63
323,1	5,77x56	8,7	1797	2,7	61	4,3	2116	1,7	58	2,8	2320	1,2	55	1,5	2591	0,80	53	
403,2	7,2x56	6,9	1899	2,3	60	3,5	2218	1,4	56	2,2	2422	1,0	54	1,2	2900	0,73	51	
504,0	7,2x70	5,6	1705	1,8	55	2,8	1986	1,1	51	1,8	2165	0,83	49	1,0	2600	0,59	46	
576,0	7,2x80	4,9	1620	1,5	53	2,4	1877	0,96	50	1,6	2041	0,70	47	0,87	2259	0,46	44	
720,0	7,2x100	3,9	1451	1,2	50	1,9	1679	0,74	46	1,3	1823	0,54	44	0,69	1950	0,34	41	

CR 180

Kg 163

ir	i_1xi_2	n_1 = 2800 min^{-1}				n_1 = 1400 min^{-1}				n_1 = 900 min^{-1}				n_1 = 500 min^{-1}				IEC
		n_2	T_{2M}	P	RD	n_2	T_{2M}	P	RD	n_2	T_{2M}	P	RD	n_2	T_{2M}	P	RD	
		min^{-1}	Nm	kW	%	min^{-1}	Nm	kW	%	min^{-1}	Nm	kW	%	min^{-1}	Nm	kW	%	
37,3	5,33x7	75	2349	22,7	81	38	2958	14,6	80	24	3347	10,8	78	13,4	3864	7,0	77	
52,5	7,5x7	53	2648	18,4	81	27	3258	11,6	79	17,1	3647	8,4	78	9,5	4164	5,5	76	
62,0	6,2x10	45	2607	15,4	80	23	3187	9,7	78	14,5	3557	7,1	77	8,1	4049	4,6	75	
75,0	7,5x10	37	2766	13,6	79	18,7	3346	8,5	77	12,0	3716	6,1	76	6,7	4208	3,9	74	225
85,0	4,25x20	33	2707	12,2	76	16,5	3312	7,7	74	10,6	3698	5,7	72	5,9	4211	3,7	70	200
106,7	5,33x20	26	2905	10,6	75	13,1	3510	6,6	73	8,4	3896	4,8	71	4,7	4409	3,1	69	180
124,0	6,2x20	23	3036	9,6	75	11,3	3642	6,0	72	7,3	4027	4,3	71	4,0	4541	2,8	69	160
150,0	7,5x20	18,7	3203	8,4	74	9,3	3808	5,2	72	6,0	4194	3,8	70	3,3	4600	2,4	68	132
173,6	6,2x28	16,1	2771	6,8	68	8,1	3318	4,3	65	5,2	3666	3,2	63	2,9	4130	2,1	60	112
213,3	5,33x40	13,1	2782	5,9	65	6,6	3330	3,7	61	4,2	3679	2,8	59	2,3	4143	1,8	56	100
248,0	6,2x40	11,3	2901	5,4	64	5,6	3448	3,4	60	3,6	3798	2,5	58	2,0	4262	1,6	55	90
261,3	5,33x49	10,7	2857	5,1	63	5,4	3399	3,2	59	3,4	3745	2,4	57	1,9	4204	1,6	54	80
303,8	6,2x49	9,2	2975	4,6	62	4,6	3517	2,9	58	3,0	3863	2,1	56	1,6	4322	1,4	53	71
367,5	7,5x49	7,6	3124	4,1	61	3,8	3666	2,6	57	2,4	4011	1,9	55	1,4	4471	1,2	52	63
420,0	7,5x56	6,7	3113	3,6	61	3,3	3641	2,2	57	2,1	3977	1,6	55	1,2	4424	1,1	52	
434,0	6,2x70	6,5	2663	3,1	57	3,2	3131	2,0	53	2,1	3429	1,5	51	1,2	3826	1,0	48	
525,0	7,5x70	5,3	2792	2,8	56	2,7	3260	1,7	52	1,7	3558	1,3	50	1,0	3955	0,85	47	
600,0	7,5x80	4,7	2629	2,4	54	2,3	3044	1,5	51	1,5	3308	1,1	48	0,83	3660	0,71	45	
750,0	7,5x100	3,7	2333	1,8	50	1,9	2704	1,1	46	1,2	2941	0,85	44	0,67	3300	0,57	40	

I pesi riportati sono indicativi e possono variare in funzione della versione del

N.B. Per i riduttori evidenziati dal doppio bordo nella colonna delle potenze è necessario verificare lo scambio termico del riduttore (come nel par. 1.7-A). Per maggiori informazioni contattare l'ufficio tecnico STM.

Listed weights are for reference only and can vary according to the gearbox version.

NOTE. Please pay attention to the frame around the input power value: for this gearboxes it's important to check the thermal capacity (comp. chapter 1.7-A). For details please contact our technical department.

Die angegebenen Gewichte sind Richtwerte und können je nach Getriebe-

HINWEIS. Sind in den Tabellen Nennleistungen eingerahmt, so ist die thermische Leistungsgrenze der Getriebe zu beachten (s. S. 1.7-A).
Für weitere Informationen wenden Sie sich bitte and unser technisches Büro.

1.6 Prestazioni riduttori CR — *16 CR gearboxes performances* — 1.6 Leistungen der CR-Getriebe

CR 215

Kg 303

ir	i_1xi_2	n_1 = 2800 min^{-1}				n_1 = 1400 min^{-1}				n_1 = 900 min^{-1}				n_1 = 500 min^{-1}				IEC
		n_2 min^{-1}	T_{2M} Nm	P kW	RD %	n_2 min^{-1}	T_{2M} Nm	P kW	RD %	n_2 min^{-1}	T_{2M} Nm	P kW	RD %	n_2 min^{-1}	T_{2M} Nm	P kW	RD %	
42,5*	4,25x10	66	4223	36	81	33	5282	23	79	21,2	5957	16,9	78	11,8	6855	11,1	76	
53,3*	5,33x10	53	4570	31	81	26	5629	19,7	79	16,9	6304	14,4	77	9,4	7202	9,3	76	
62,0*	6,2x10	45	4800	28	80	23	5859	17,7	78	14,5	6534	12,9	77	8,1	7200	8,1	75	225
75,0*	7,5x10	37	5090	25	80	18,7	6150	15,5	78	12,0	6825	11,2	76	6,7	7200	6,7	75	200
80,0*	5,33x15	35	4794	22	79	17,5	5828	14,0	76	11,3	6487	10,2	75	6,3	7200	6,5	73	
112,5*	7,5x15	25	5303	17,8	78	12,4	6336	11,0	75	8,0	7200	8,2	74	4,4	7200	4,7	71	180
120,9*	6,2x19,5	23	4953	15,7	76	11,6	5942	9,8	74	7,4	6573	7,1	72	4,1	7200	4,5	70	160
146,3*	7,5x19,5	19,1	5225	13,9	76	9,6	6214	8,5	73	6,2	6844	6,2	71	3,4	7200	3,7	69	
173,6*	6,2x28	16,1	4649	12,4	63	8,1	5584	7,4	63	5,2	6181	5,3	63	2,9	6974	3,3	63	132
213,3*	5,33x40	13,1	4279	8,7	68	6,6	5108	5,5	64	4,2	5637	4,0	62	2,3	6341	2,6	59	112
248,0*	6,2x40	11,3	4459	7,9	67	5,6	5289	4,9	63	3,6	5818	3,6	61	2,0	6521	2,4	58	100
266,7*	5,33x50	10,5	4286	7,3	65	5,3	5108	4,6	61	3,4	5631	3,4	58	1,9	6328	2,2	55	
300,0*	7,5x40	9,3	4687	6,9	66	4,7	5516	4,3	62	3,0	6045	3,2	60	1,7	6749	2,1	57	90
375,0*	7,5x50	7,5	4690	5,8	63	3,7	5512	3,7	59	2,4	6035	2,7	57	1,3	6732	1,8	53	80
427,8*	6,2x69	6,5	4337	4,9	61	3,3	5087	3,1	57	2,1	5565	2,3	54	1,2	6201	1,5	51	71
517,5*	7,5x69	5,4	4543	4,3	60	2,7	5293	2,7	56	1,7	5771	2,0	53	1,0	6407	1,3	50	
600,0*	7,5x80	4,7	4136	3,8	53	2,3	4814	2,4	49	1,5	5246	1,8	47	0,83	5820	1,2	43	63
750,0*	7,5x100	3,7	3909	2,9	53	1,9	4523	1,8	49	1,2	4914	1,3	47	0,67	5434	0,87	44	

CR 250

Kg 527

ir	i_1xi_2	n_1 = 2800 min^{-1}				n_1 = 1400 min^{-1}				n_1 = 900 min^{-1}				n_1 = 500 min^{-1}				IEC
		n_2 min^{-1}	T_{2M} Nm	P kW	RD %	n_2 min^{-1}	T_{2M} Nm	P kW	RD %	n_2 min^{-1}	T_{2M} Nm	P kW	RD %	n_2 min^{-1}	T_{2M} Nm	P kW	RD %	
38,5*	3,5x11	73	5508	51,3	82	36	7052	33	80	23	8036	25	79	13	9346	16,3	78	280
52,5*	3,5x15	53	6328	43,7	81	27	7925	28	79	17,1	8942	21	78	9,5	10296	13,3	77	250
61,9*	4,13x15	45	6707	39,5	81	23	8303	25	79	14,5	9321	18,2	78	8,1	10500	11,6	77	225
77,5*	5,17x15	36	7225	34,2	80	18,1	8822	21	78	11,6	9839	15,4	77	6,5	10500	9,3	76	
90,0*	6x15	31	7570	31	80	15,6	9166	19,1	78	10	10184	13,8	77	5,6	10500	8,1	76	200
108,8*	7,25x15	26	8005	27,2	79	12,9	9602	16,7	78	8,3	10500	11,9	77	4,6	10500	6,7	75	180
120,0*	6x20	23	7190	23,1	76	11,7	8677	14,3	74	7,5	9625	10,4	73	4,2	10500	6,4	71	160
145,0*	7,25x20	19,3	7596	20,3	76	9,7	9083	12,5	74	6,2	10031	9	72	3,4	10500	5,4	71	
177,0*	6x29,5	15,8	7068	15,9	74	7,9	8463	9,8	72	5,1	9353	7,1	70	2,8	10500	4,6	68	132
206,7*	5,17x40	13,5	6876	14,4	68	6,8	8234	9	65	4,4	9099	6,6	63	2,4	10251	4,3	61	112
240,0*	6x40	11,7	7169	13	67	5,8	8527	8,1	64	3,8	9392	5,9	63	2,1	10500	3,8	60	100
290,0*	7,25x40	9,5	7169	11	65	4,8	8527	6,9	62	3,1	9392	5	60	1,7	10500	3,2	58	
360,0*	6x60	7,9	7539	9,7	64	3,9	8897	6	61	2,5	9763	4,4	59	1,4	10500	2,7	57	90
435,0*	7,25x60	6,4	6954	7,5	63	3,2	8156	4,6	59	2,1	8922	3,4	57	1,1	10500	2,3	55	80
507,5*	7,25x70	5,5	5210	5,3	57	2,8	6175	3,4	53	1,8	6789	2,5	51	1,0	7607	1,7	47	71
572,8*	7,25x79	4,9	5682	5,3	55	2,4	6646	3,3	51	1,6	7260	2,5	49	0,87	8078	1,6	45	
710,5*	7,25x98	3,9	5682	4,2	55	2,0	6646	2,7	51	1,3	7260	2,1	47	0,70	8078	1,3	45	63

* A richiesta / On request / Auf Anfrage

I pesi riportati sono indicativi e possono variare in funzione della versione del

N.B. Per i riduttori evidenziati dal doppio bordo nella colonna delle potenze è necessario verificare lo scambio termico del riduttore (come nel par. 1.7-A). Per maggiori informazioni contattare l'ufficio tecnico STM.

Listed weights are for reference only and can vary according to the gearbox version.

NOTE. Please pay attention to the frame around the input power value: for this gearboxes it's important to check the thermal capacity (comp. chapter 1.7-A). For details please contact our technical department.

Die angegebenen Gewichte sind Richtwerte und können je nach Getriebe-

HINWEIS. Sind in den Tabellen Nennleistungen eingerahmt, so ist die thermische Leistungsgrenze der Getriebe zu beachten (s. S. 1.7-A).
Für weitere Informationen wenden Sie sich bitte and unser technisches Büro.

1.6 Prestazioni Limitatore

Nelle tabelle seguenti sono riportate le coppie di slittamento M_{2S} in funzione del numero dei giri del dado, o della ghiera di regolazione ottenibili con la disposizione standard delle molle (par. 1.6.1).
Tali valori prescindono dalle prestazioni delle dentature.
Valori più elevati di M_{2S} si possono otte- nere, a richiesta, con una diversa disposi- zione delle molle.
I
valori di taratura si riferiscono ad una condizione statica(durante lo slittamento la coppia trasmessa decade considerevol- mente) ed hanno un significato indicativo in quanto ottenuti per via teorica.
E' opportuno verificare periodicamente la coppia di taratura soprattutto durante la prima fase di funzionamento.

16 Performances limiter

In the following tables the slipping torques M_{2S} are listed according to number of turns of nut or ring nut obtainable with a standard arrangement of the springs (chapter 1.6.1).

Such data prescind from tothing perfor- mances.

M_{2S} higher values can eventually be obtained with a different arrangement of the springs.

Calibration values refer to a static condition (during slippage torque reports a con- siderable decrease) and are approximate being calculated on a theoric basis. It is important therefore to check the calibration torque periodically especially during first phase of running.

1.6 Leistungen der Rutschkupplung

In der folgenden Tabelle sind die Rutsch- momente M_{2S} dargestellt, wie sie je nach Stellung der Sechskant- oder Nutmutter mit der Standardanordnung der Tellerfedern erreicht werden (siehe kapitel 1.6.1).
Diese Werte lassen die maximal übertrag- bare Leistung der Getriebe in Abhängigkeit von der Untersetzung jedoch außer acht.
Mit einer anderen Anordnung der Teller- federn können auch größere Rutschmo- mente M_{2S} erreicht werden.
Die angegebenen Werte sind statische Momente (das Rutschmoment nimmt wäh- rend des Schlupfvorganges ab) und sind nur als Näherungswerte zu betrachten.
Das eingestellte Rutschmoment sollte in der Einlaufphase in periodischen Abständen überprüft und gegebenenfalls korrigiert werden.

—
Senza Taratura maggiorata
Without Heavy calibration
Ohne Erhöhtes Ansprechmoment

LP LC

LF

RI RMI	ir	N° GIRI DEL DADO DI REGOLAZIONE *N° OF TURNS OF ADJUSTEMENT RING NUT* DREHUNGEN DER EINSTELLMUTTER										
		1/2	2/3	1	1 1/3	1 2/3	2	2 1/3	2 2/3	3	3 1/3	3 2/3
		M_{2S} (Nm)										
28	tutti i rapporti *all ratios* alle Untersetzungen	4	5.5	7.5	10	13						
40		12	16	24	31	38	46					
50		16	20	29	39	47	55	63				
63		21	27	41	55	65	79	89	101	112	124	
70		21	27	41	55	65	79	89	101	112	124	
85	7-10-15-28	60	79	113.5	148	175	210	236	265	298	323	345
	20-40-49	66	87	125	163	192.5	231	260	292	328	356	380
	56 - 100	72	95	136	178	210	253	284	319	358	388	415
110	7-10-15-28	106	141	207	271	334	392	454	516	572	630	
	20-40-49	114	152	224	293	361	423	490	557	618	680	
	56 - 100	131	174	257	336	414	486	640	709	781		
130	tutti / *all* / alle	240	310	450	590	720	850	950				
150	tutti / *all* / alle	550	730	1070	1390	1700	1990	2200				

RI RMI	ir	N° GIRI DEL DADO DI REGOLAZIONE *N° OF TURNS OF ADJUSTEMENT RING NUT* DREHUNGEN DER EINSTELLMUTTE												
		1/4	1/2	2/3	1	1 1/3	1 2/3	2	2 1/3	2 2/3	3	3 1/3	3 2/3	4
		M_{2S} (Nm)												
28	tutti i rapporti *all ratios* alle Untersetzungen													
40		15	28	36	51	64	75	86	97					
50		21	40	52	74	93	110	126	141	154	167			
63		27	51	66	93	120	140	160	175	195	210			
70		24	45	58	81	100	115	125	135	145	151	155	160	
85	7-10-15-28	50	85	115	160	200	240	280	310	340	370	395	420	
	20-40-49	60	95	120	170	220	265	300	340	370	400	430	460	
	56 - 100	80	100	130	190	240	290	330	370	400	440	470	500	
110	7-10-15-28	140	260	340	490	630	750	860	960	1060	1150	1230	1310	1390
	20-40-49	150	285	370	530	670	800	930	1040	1140	1230	1330	1410	1500
	56 - 100	170	330	430	600	770	930	1060	1190	1300	1415	1520	1620	1720
130	tutti / *all* / alle	244	476	625	910	1180	1438	1686	1920	2160	2390			
150	tutti / *all* / alle	550	860	1130	1660	2170	2660	3140	3600	4050	4500	4930	5370	

TM
Taratura maggiorata
Heavy calibration
Erhöhtes Ansprechmoment

LP LC

LF

RI RMI	CRI CRMI	ir	CR CB	ir	N° GIRI DEL DADO DI REGOLAZIONE *N° OF TURNS OF ADJUSTEMENT RING NUT* DREHUNGEN DER EINSTELLMUTTER						
					1/2	2/3	1	1 1/3	1 2/3	2	2 1/3
					M_{2S} (Nm)						
28	28	tutti /*all* / alle	—		12.5	17	24				
40	40		40	tutti/*all*/alle	40	53	77	91			
50	50		50		50	65	93	128			
63	63		—		96	125	178	231	288		
70	70		70	tutti/*all*/alle	96	125	178	231	288		
85	85	7-10-15-28	85	43.0 - 128.8	146	185	263	350	414	471	542
		20-40-49		167.6 - 225.4	161	204	289	385	456	518	596
		56 - 100		286.4 - 460.0	176	223	316	420	497	566	651
110	110	7-10-15-28	110	43.0 - 128.8	261	342	501	653	805	945	
		20-40-49		167.6 - 225.4	282	369	541	705	869	1021	
		56 - 100		286.4 - 460.0	323	424	621	810	998	1172	
130	130	tutti / *all* / alle	130	tutti/*all*/alle	470	620	910	1180	1450	1700	1900
150	150	tutti / *all* / alle	150	tutti/*all*/alle	830	110	1600	2050	2500	3000	3350

RI RMI	CRI CRMI	ir	CR CB	ir	N° GIRI DEL DADO DI REGOLAZIONE *N° OF TURNS OF ADJUSTEMENT RING NUT* DREHUNGEN DER EINSTELLMUTTER												
					1/4	1/2	2/3	1	1 1/3	1 2/3	2	2 1/3	2 2/3	3	3 1/3	3 2/3	4
					M_{2S} (Nm)												
28	28	tutti /*all* / alle	—														
40	40		40	tutti/*all*/alle	15	28	36	51	64	75	86	97					
50	50		50		21	40	52	74	93	110	126	141	154	167			
63	63		—		51	100	130	190	245	295	345	385	440	480			
70	70		70	tutti/*all*/alle	38	74	96	135	175	210	240	270	300	320	350		
85	85	7-10-15-28	85	43.0 - 128.8	100	125	160	230	300	360	410	460	510	560	600	640	680
		20-40-49		167.6 - 225.4	110	135	180	255	330	390	450	510	560	610	650	700	750
		56 - 100		286.4 - 460.0	120	150	195	280	350	425	490	550	610	665	715	765	815
110	110	7-10-15-28	110	43.0 - 128.8	190	380	500	740	930	1150	1350	1500	1700	1850	2020	2180	—
		20-40-49		167.6 - 225.4	200	400	540	780	1000	1230	1430	1620	1800	2000	2170	2360	—
		56 - 100		286.4 - 460.0	220	450	600	900	1150	1380	1620	1840	2070	2300	2500	2700	—
130	130	tutti / *all* / alle	130	tutti/*all*/alle	244	476	625	910	1180	1438	1686	1920	2160	2390			
150	150	tutti / *all* / alle	150	tutti/*all*/alle	550	860	1130	1660	2170	2660	3140	3600	4050	4500	4930	5370	

ATTENZIONE !

Quando è richiesto il minimo errore di taratura è opportuno verificare in pratica, staticamente, che la frizione slitti effettiva- mente al valore desiderato è comunque consigliabile testare la coppia trasmissibile direttamente sulla macchina utilizzatrice.

ATTENTION !

When minimum calibration error is required it is always advisable to actually verify, statically, that clutch slips at the required value. We suggest, however, to test the torque directly on to the machine.

ACHTUNG !

Um Abweichungen zu vermeiden, müssen die eingestellten Momente im eingebauten Zustand kontrolliert und eventuell korrigiert werden.

1.6 Prestazioni Limitatore

1.6.1 Disposizione delle molle

La disposizione standard delle molle garantisce una buona sensibilità di regolazione e consente di trasmettere la massima coppia nominale del riduttore.

16 Performances limiter

1.6.1 Springs arrangement

Standard arrangement of springs guarantees an acceptable setting and enables the gearbox to transmit the maximum nominal torque

1.6 Leistungen der Rutschkupplung

1.6.1 Anordnung der Tellerfedern

Die Standardanordnung der Tellerfedern erlaubt eine feinfühlige Einstellung des Rutschmomentes bis zum maximalen Nennmoment des Getriebes.

	LP LC			LF			
	RI- RMI		CRI - CRMI	CR - CB	RI- RMI	RI - RMI	CRI - CRMI	CR - CB
	—	TM			—	TM		
28	5 molle/*springs* 20/10.2/1.1	6 molle/*springs* 20/10.2/1.1			—			
40	5 molle/*springs* 23/12.2/1.5	6 molle/*springs* 23/12.2/1.5			2 molle/*springs* 63/31/2.5			
50	5 molle/*springs* 31.5/16.3/1.75	6 molle/*springs* 31.5/16.3/1.75			2 molle/*springs* 80/41/3			
63	7 molle/*springs* 31.5/16.3/2	6 molle/*springs* 31.5/16.3/2		—	2 molle/*springs* 80/41/3	2 molle/*springs* 80/41/4		—
70	7 molle/*springs* 34/16.3/2	6 molle/*springs* 34/16.3/2			2 molle/*springs* 90/46/2.5	2 molle/*springs* 90/46/3.5		
85	10 molle/*springs* 40/18.3/2	9 molle/*springs* 40/18.3/2			2 molle/*springs* 100/51/3.5	2 molle/*springs* 100/51/4		
110	10 molle/*springs* 45/22.4/2.5	9 molle/*springs* 45/22.4/2.5			2 molle/*springs* 125/61/5	2 molle/*springs* 125/61/6		
130	3 molle/*springs* 60/30.5/3.5	6 molle/*springs* 60/30.5/3.5		—	2 molle/*springs* 125/75.5/6			
150	6 molle/*springs* 60/30.5/3.5	9 molle/springs 60/30.5/3.5		—	2 molle/*springs* 150/81/8			

2	
3	
5	
6	
7	
9	
10	

IN PARALLELO
max. coppia
min. sensibilita'
PARALLEL
max. torque
min. sensitivity
PARALLEL
max. Moment
min. Empfindlichkeit

IN SERIE
min. coppia
max. sensibilita'
SERIES
min. torque
max. sensitivity
SERIE
min. Moment
max. Empfindlichkeit

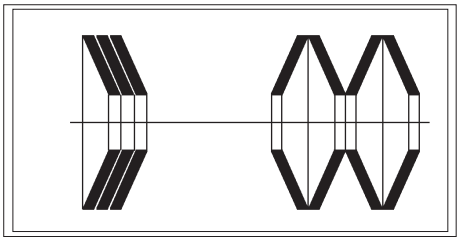

Per problemi specifici è opportuno consultarci, ma a livello indicativo si può affermare che accoppiando più molle con lo stesso verso (in parallelo) si incrementa la coppia massima di slittamento raggiungibile; viceversa alternandone il posizionamento in serie si aumenta la sensibilità di taratura.

Should the user require any specific information, we suggest to contact our technical department. On a general basis, how- ever, if the springs are arranged in the same direction, a higher maximum torque of slippage can be reached; on the contrary by alternating their arrangement the calibration sensitivity is increased.

Das Rutschmoment ist umso größer, je mehr Tellerfedern parallel angeordnet sind (progressive Federkennlinie). Wird ein niedrigeres Moment oder eine erhöhte Justiergenauigkeit gewünscht, so können die Federn auch gegensinnig angeordnet werden (degressive Federkennlinie).
Sollten spezifische Fragen bestehen, so empfehlen wir, unser technisches Büro zu Rate zu ziehen.

1.7 - Motoriduttori

n_2 min^{-1}	ir	T2 Nm	FS'		0.09 kW	Ptn kW
546	5	1.4	20	R40	T56A2	1.1
390	7	1.8	6	R28	T56A2	0.6
273	10	2.5	5.1	R28	T56A2	0.5
191	7	3.6	4.1	R28	T56B4	0.6
182	15	3.7	3.8	R28	T56A2	0.5
137	20	4.8	6.1	R40	T56A2	0.6
137	20	4.7	2.5	R28	T56A2	0.4
134	10	5.1	3.4	R28	T56B4	0.5
123	7	5.5	3.3	R28	T63B6	0.6
98	28	6.3	5.4	R40	T56A2	0.5
98	28	6.1	2.5	R28	T56A2	0.3
89	15	7.4	5.7	R40	T56B4	0.7
89	15	7.2	2.5	R28	T56B4	0.5
86	10	7.9	6.2	R40	T63B6	0.8
86	10	7.7	2.6	R28	T63B6	0.5
68	40	8.2	3.9	R40	T56A2	0.4
68	40	8.1	1.6	R28	T56A2	0.3
67	20	9.4	4	R40	T56B4	0.6
67	20	9.2	1.6	R28	T56B4	0.4
62	44	10.4	4.7	CB40	T56A2	0.7
57	15	11.2	4.4	R40	T63B6	0.7
57	15	11	1.8	R28	T63B6	0.5
56	49	9.6	3.1	R40	T56A2	0.4
56	49	9.4	1.3	R28	T56A2	0.3
55	50	11.8	4.2	CB40	T56A2	0.7
49	56	10.6	2.6	R40	T56A2	0.4
49	56	10.4	1.2	R28	T56A2	0.2
48	28	12	3.6	R40	T56B4	0.5
48	28	11.5	1.7	R28	T56B4	0.3
47	58	13.7	3.8	CB40	T56A2	0.7
45	61	15.2	6.2	CB50	T56A2	1.2
43	20	14.8	5.8	R50	T63B6	0.9
43	20	14	3.1	R40	T63B6	0.6
43	20	13.8	1.3	R28	T63B6	0.4
40	68	15.8	3.5	CB40	T56A2	0.7
39	70	11.7	2	R40	T56A2	0.3
39	70	12.1	0.9	R28	T56A2	0.2
37	73	15.4	6	CB50	T56A2	0.8
34	80	12.6	1.7	R40	T56A2	0.3
34	80	12.7	0.8	R28	T56A2	0.2
34	40	15.4	2.6	R40	T56B4	0.4
34	40	15.2	1.1	R28	T56B4	0.3
33	83	16.7	3	CB40	T56A2	0.5
31	28	18.7	4.9	R50	T63B6	0.7
31	28	17.9	2.8	R40	T63B6	0.5
31	28	17	1.2	R28	T63B6	0.3
30	44	20.6	2.9	CB40	T56B4	0.7
30	90	19	4.8	CB50	T56A2	0.8
28	97	20.2	4.8	CB50	T56A2	0.8
28	48	23.7	4.5	CB50	T56B4	1.1
27	49	17.9	2.1	R40	T56B4	0.4
27	49	17.5	0.9	R28	T56B4	0.3
27	100	16	1.4	R40	T56A2	0.3
27	100	14.7	0.6	R28	T56A2	0.2
27	50	23.4	2.5	CB40	T56B4	0.7
26	52	25.4	4.3	CB50	T56B4	1.1
25	109	21.6	2.4	CB40	T56A2	0.5
24	114	23.7	4.1	CB50	T56A2	0.8
24	56	19.4	1.9	R40	T56B4	0.4
24	56	19.3	0.8	R28	T56B4	0.2
23	58	26.5	2.5	CB40	T56B4	0.7
22	61	29.7	3.6	CB50	T56B4	1.1
22	40	25.2	3.7	R50	T63B6	0.7
22	127	24.8	2.3	CB40	T56A2	0.5
22	40	22.4	2	R40	T63B6	0.4
22	40	22.5	0.8	R28	T63B6	0.3
19.7	68	31	2.1	CB40	T56B4	0.7
19.6	44	31.3	2.1	CB40	T63B6	0.7
19.1	70	21.2	1.3	R40	T56B4	0.3
18.4	73	30	3.6	CB50	T56B4	0.7
17.9	48	36	3	CB50	T63B6	1.0
17.6	49	28.9	2.8	R50	T63B6	0.6
17.6	49	26	1.7	R40	T63B6	0.4
17.2	50	35.5	1.8	CB40	T63B6	0.6
16.9	51	37.2	6.3	CB70	T63B6	1.5
16.8	80	22.5	1.2	R40	T56B4	0.3
16.6	165	27.4	1.6	CB40	T56A2	0.4
16.5	52	38.5	2.9	CB50	T63B6	1.0
16.1	83	32.6	1.8	CB40	T56B4	0.5
16.1	170	31.1	2.8	CB50	T56A2	0.7

1.7 - *Gearmotors*

n_2 min^{-1}	ir	T2 Nm	FS'		0.09 kW	Ptn kW
15.4	56	31.3	2.5	R50	T63B6	0.6
15.4	56	28.6	1.4	R40	T63B6	0.3
14.9	90	36.9	3	CB50	T56B4	0.7
14.8	58	39.9	1.8	CB40	T63B6	0.6
14.6	59	42.4	6.2	CB70	T63B6	1.5
14.1	61	45.2	2.4	CB50	T63B6	1.0
13.8	97	38.5	2.9	CB50	T56B4	0.7
13.7	199	36.3	2.4	CB50	T56A2	0.6
13.4	100	29	1	R40	T56B4	0.3
12.7	68	47	1.5	CB40	T63B6	0.6
12.3	222	35.7	1.3	CB40	T56A2	0.4
12.3	70	50.4	5.2	CB70	T63B6	1.5
12.3	70	36.4	2	R50	T63B6	0.5
12.3	109	41.2	1.6	CB40	T56B4	0.5
12.3	70	30.6	1	R40	T63B6	0.3
11.8	73	45.2	2.4	CB50	T63B6	0.7
11.8	114	45.4	2.4	CB50	T56B4	0.7
10.8	80	37.6	1.8	R50	T63B6	0.5
10.8	80	31.8	0.9	R40	T63B6	0.3
10.6	127	48	1.4	CB40	T56B4	0.5
10.4	262	36.4	1.6	CB50	T56A2	0.5
10.4	83	51.4	4.4	CB70	T63B6	1.2
10.4	83	48.8	1.3	CB40	T63B6	0.5
9.6	140	50.3	5.3	40/70	T56B4	1.0
9.6	140	51.2	4.6	40/63	T56B4	1.0
9.6	140	49.4	4.2	28/70	T56B4	0.6
9.6	140	50.4	4.1	28/63	T56B4	0.6
9.6	140	48.5	2.3	28/50	T56B4	0.6
9.6	140	50.3	2.2	40/50	T56B4	1.0
9.6	140	45.7	1.4	28/40	T56B4	0.6
9.6	140	46.8	1.4	40/40	T56B4	1.0
9.6	90	52.9	2.1	CB50	T63B6	0.7
9.4	290	43	2.2	CB50	T56A2	0.6
9.3	295	38	0.8	CB40	T56A2	0.3
8.9	97	57.2	1.9	CB50	T63B6	0.7
8.6	100	43.9	1.3	R50	T63B6	0.4
8.6	100	40.9	0.7	R40	T63B6	0.3
8.1	165	51.7	1	CB40	T56B4	0.4
8.1	337	43.5	0.7	CB40	T56A2	0.3
7.9	109	61.2	1.1	CB40	T63B6	0.4
7.9	170	57.9	1.8	CB50	T56B4	0.6
7.9	347	47	1.3	CB50	T56A2	0.5
7.8	110	64.8	3.9	CB70	T63B6	1.0
7.5	114	67.3	1.6	CB50	T63B6	0.7
7	388	50	0.6	CB40	T56A2	0.3
6.8	127	70.8	1	CB40	T63B6	0.4
6.7	199	67.7	1.5	CB50	T56B4	0.6
6.7	407	55.1	1.1	CB50	T56A2	0.5
6.7	200	69.2	4.2	40/70	T56B4	0.9
6.7	200	69.2	3.6	40/63	T56B4	0.9
6.7	200	67.9	3.4	28/70	T56B4	0.5
6.7	200	67.9	3.4	28/63	T56B4	0.5
6.7	200	66.9	1.6	28/50	T56B4	0.5
6.7	200	67.8	1.6	40/50	T56B4	0.9
6.7	200	63	1.1	28/40	T56B4	0.5
6.7	200	64.3	1.1	40/40	T56B4	0.9
6.7	129	76.1	6.3	CB85	T63B6	1.3
6.6	130	76.7	3.3	CB70	T63B6	1.0
6	222	67.2	0.8	CB40	T56B4	0.4
5.2	165	74.1	0.8	CB40	T63B6	0.3
5.2	166	84.6	3	CB70	T63B6	0.8
5.1	168	87.3	5.5	CB85	T63B6	1.1
5.1	262	67.5	0.9	CB50	T56B4	0.5
5.1	170	84.6	1.3	CB50	T63B6	0.5
4.8	280	82.6	6.1	40/85	T56B4	0.9
4.8	280	82.6	3.5	40/70	T56B4	0.9
4.8	280	80.8	3.4	28/70	T56B4	0.5
4.8	280	82.4	3	28/63	T56B4	0.5
4.8	280	84.3	3	40/63	T56B4	0.9
4.8	280	82.5	1.3	28/50	T56B4	0.5
4.8	280	84.6	1.3	40/50	T56B4	0.9
4.8	280	76.8	0.9	28/40	T56B4	0.5
4.8	280	80.8	0.9	40/40	T56B4	0.9
4.6	290	93.4	1.2	CB50	T56B4	0.6
4.6	591	74	0.8	CB50	T56A2	0.5
4.3	199	99	1.1	CB50	T63B6	0.5
3.9	222	98	0.6	CB40	T63B6	0.3
3.9	347	84.4	0.7	CB50	T56B4	0.5
3.8	225	117.1	4.1	CB85	T63B6	1.1
3.8	228	113.9	2.4	CB70	T63B6	0.8

1.7 - Getriebemotoren

n_2 min^{-1}	ir	T2 Nm	FS'		0.09 kW	Ptn kW
3.4	400	125.7	4.0	40/85	T56B4	0.6
3.4	400	120.5	2.7	40/70	T56B4	0.6
3.4	400	120.3	2.1	40/63	T56B4	0.6
3.4	400	118.4	1.6	28/63	T56B4	0.4
3.4	400	118.4	1.6	28/70	T56B4	0.4
3.4	400	117.9	0.9	28/50	T56B4	0.4
3.4	400	120.7	0.9	40/50	T56B4	0.6
3.4	400	110.5	0.6	28/40	T56B4	0.4
3.4	400	112.5	0.6	40/40	T56B4	0.6
3.3	407	100.0	0.6	CB50	T56B4	0.5
3.3	262	100.0	0.6	CB50	T63B6	0.5
3.0	286	120.0	2.5	CB85	T63B6	1.0
3.0	290	141.4	0.8	CB50	T63B6	0.5
2.9	295	117.5	1.5	CB70	T63B6	0.7
2.8	303	142.6	2.0	CB70	T63B6	0.7
2.5	339	129.1	1.4	CB70	T63B6	0.7
2.5	342	133.8	2.4	CB85	T63B6	0.9
2.2	600	154.1	3.2	40/85	T56B4	0.7
2.2	600	146.6	2.2	28/70	T56B4	0.5
2.2	600	150.5	2.1	40/70	T56B4	0.7
2.2	600	146.1	1.7	28/63	T56B4	0.5
2.2	600	150.0	1.7	40/63	T56B4	0.7
2.2	600	145.6	0.8	28/50	T56B4	0.5
2.2	600	150.0	0.7	40/50	T56B4	0.7
2.2	394	154.1	2.1	CB85	T63B6	0.9
2.2	394	145.8	1.3	CB70	T63B6	0.7
1.9	460	179.5	1.8	CB85	T63B6	0.9
1.9	464	171.6	1.1	CB70	T63B6	0.7
1.7	504	241.5	6.1	CB130	T63B6	2.0
1.5	576	271.4	5.1	CB130	T63B6	2.0
1.4	618	216.9	0.9	CB70	T63B6	0.7
1.4	980	232.0	2.2	40/85	T56B4	0.4
1.4	980	219.8	1.5	40/70	T56B4	0.4
1.4	980	225.0	1.1	40/63	T56B4	0.4
1.4	980	220.9	0.9	28/70	T56B4	0.3
1.4	980	220.9	0.9	28/63	T56B4	0.3
1.2	720	318.0	5.7	CB150	T63B6	2.6
1.2	720	303.2	4.0	CB130	T63B6	1.8
0.98	1372	254.2	2.0	40/85	T56B4	0.4
0.98	1372	264.2	1.2	40/70	T56B4	0.4
0.98	1372	261.6	1.0	40/63	T56B4	0.4
0.98	1372	254.1	0.9	28/70	T56B4	0.3
0.98	1372	264.1	0.8	28/63	T56B4	0.3
0.68	1960	340.9	1.5	40/85	T56B4	0.4
0.68	1960	342.9	0.9	40/70	T56B4	0.4
0.68	1960	341.1	0.8	28/70	T56B4	0.2
0.68	1960	340.9	0.7	40/63	T56B4	0.4
0.68	1960	340.2	0.7	28/63	T56B4	0.2
0.48	2800	394.7	1.3	40/85	T56B4	0.3
0.48	2800	394.5	0.8	40/70	T56B4	0.3
0.48	2800	394.7	0.6	40/63	T56B4	0.3
0.34	4000	529.4	0.9	40/85	T56B4	0.3
0.34	4000	505.3	0.6	40/70	T56B4	0.3
0.24	5600	681.8	0.7	40/85	T56B4	0.3
0.19	7000	766.7	0.6	40/85	T56B4	0.3

1.7 - Motoriduttori

n_2 min^{-1}	ir	T2 Nm	FS'		0.11 kW	Ptn kW
262	5	3.4	11	R40	T56C4	1.1
187	7	4.5	3.3	R28	T56C4	0.6
131	10	6.5	6.5	R40	T56C4	0.9
131	10	6.3	2.7	R28	T56C4	0.5
87	15	9.3	4.5	R40	T56C4	0.7
87	15	9	2	R28	T56C4	0.5
66	20	11.7	3.2	R40	T56C4	0.6
66	20	11.5	1.3	R28	T56C4	0.4
47	28	15.1	2.9	R40	T56C4	0.5
47	28	14.4	1.3	R28	T56C4	0.3
33	40	19.2	2.1	R40	T56C4	0.4
33	40	18.9	0.8	R28	T56C4	0.3
30	44	25.8	2.3	CB40	T56C4	0.7
27	48	29.7	3.6	CB50	T56C4	1.1
27	49	22.4	1.7	R40	T56C4	0.4
27	49	22	0.7	R28	T56C4	0.3
26	50	29.2	2	CB40	T56C4	0.7
25	52	31.7	3.4	CB50	T56C4	1.1
23	56	24.3	1.5	R40	T56C4	0.4
23	56	24.3	0.6	R28	T56C4	0.2
23	58	32.9	2	CB40	T56C4	0.7
21	61	37.1	2.9	CB50	T56C4	1.1
19.3	68	38.6	1.7	CB40	T56C4	0.7
18.7	70	26.3	1.1	R40	T56C4	0.3
18	73	37.5	2.9	CB50	T56C4	0.7
16.4	80	28.3	0.9	R40	T56C4	0.3
15.8	83	40.6	1.5	CB40	T56C4	0.5
14.6	90	46.1	2.4	CB50	T56C4	0.7
13.5	97	48.2	2.3	CB50	T56C4	0.7
13.1	100	36.2	0.8	R40	T56C4	0.3
12	109	51.4	1.3	CB40	T56C4	0.5
11.5	114	56.8	1.9	CB50	T56C4	0.7
10.3	127	60.1	1.1	CB40	T56C4	0.5
9.4	140	62.8	4.2	40/70	T56C4	1.0
9.4	140	64	3.7	40/63	T56C4	1.0
9.4	140	61.7	3.4	28/70	T56C4	0.6
9.4	140	62.9	3.3	28/63	T56C4	0.6
9.4	140	60.5	1.8	28/50	T56C4	0.6
9.4	140	62.7	1.8	40/50	T56C4	1.0
9.4	140	57.2	1.1	28/40	T56C4	0.6
9.4	140	58.2	1.1	40/40	T56C4	1.0
7.9	165	64.7	0.8	CB40	T56C4	0.4
7.7	170	72.2	1.4	CB50	T56C4	0.6
6.6	199	84.6	1.2	CB50	T56C4	0.6
6.6	200	89.9	5.6	40/85	T56C4	0.9
6.6	200	86.7	3.3	40/70	T56C4	0.9
6.6	200	86.5	2.9	40/63	T56C4	0.9
6.6	200	85	2.7	28/63	T56C4	0.5
6.6	200	85	2.7	28/70	T56C4	0.5
6.6	200	83.4	1.3	28/50	T56C4	0.5
6.6	200	85.2	1.3	40/50	T56C4	0.9
6.6	200	78.6	0.9	28/40	T56C4	0.5
6.6	200	80.2	0.9	40/40	T56C4	0.9
5.9	222	83.2	0.7	CB40	T56C4	0.4
5	262	83.5	0.7	CB50	T56C4	0.5
4.7	280	103.2	4.8	40/85	T56C4	0.9
4.7	280	103.2	2.8	40/70	T56C4	0.9
4.7	280	101.1	2.7	28/70	T56C4	0.5
4.7	280	103.4	2.4	28/63	T56C4	0.5
4.7	280	105.4	2.4	40/63	T56C4	0.9
4.7	280	103.4	1.1	28/50	T56C4	0.5
4.7	280	105.2	1	40/50	T56C4	0.9
4.7	280	96.2	0.7	28/40	T56C4	0.5
4.7	280	101.3	0.7	40/40	T56C4	0.9
4.5	290	116.3	0.9	CB50	T56C4	0.6
3.3	400	157.1	3.2	40/85	T56C4	0.6
3.3	400	150.4	2.1	40/70	T56C4	0.6
3.3	400	150.3	1.7	40/63	T56C4	0.6
3.3	400	147.7	1.3	28/63	T56C4	0.4
3.3	400	147.7	1.3	28/70	T56C4	0.4
3.3	400	147.6	0.7	28/50	T56C4	0.4
3.3	400	151.2	0.7	40/50	T56C4	0.6
2.2	600	193	2.6	40/85	T56C4	0.7
2.2	600	182.9	1.7	28/70	T56C4	0.5
2.2	600	187.9	1.7	40/70	T56C4	0.7
2.2	600	183.3	1.4	28/63	T56C4	0.5
2.2	600	188.4	1.3	40/63	T56C4	0.7
2.2	600	183.3	0.6	28/50	T56C4	0.5
1.3	980	289.5	1.7	40/85	T56C4	0.4
1.3	980	275	1.2	40/70	T56C4	0.4

1.7 - *Gearmotors*

n_2 min^{-1}	ir	T2 Nm	FS'		0.11 kW	Ptn kW
1.3	980	283.5	0.9	40/63	T56C4	0.4
1.3	980	273.6	0.7	28/63	T56C4	0.3
1.3	980	273.6	0.7	28/70	T56C4	0.3
0.95	1372	319.8	1.6	40/85	T56C4	0.4
0.95	1372	332.1	1	40/70	T56C4	0.4
0.95	1372	331.3	0.8	40/63	T56C4	0.4
0.95	1372	322.8	0.7	28/70	T56C4	0.3
0.95	1372	331.5	0.7	28/63	T56C4	0.3
0.67	1960	423.1	1.2	40/85	T56C4	0.4
0.67	1960	424.1	0.8	40/70	T56C4	0.4
0.67	1960	422.4	0.7	28/70	T56C4	0.2
0.47	2800	491.1	1	40/85	T56C4	0.3
0.47	2800	488.9	0.7	40/70	T56C4	0.3
0.33	4000	670.7	0.7	40/85	T56C4	0.3

1.7 - Getriebemotoren

n_2 min^{-1}	ir	T2 Nm	FS'		0.13 kW	Ptn kW
550	5	2.1	13	R40	T56B2	1.1
393	7	2.8	3.9	R28	T56B2	0.6
275	10	3.9	3.3	R28	T56B2	0.5
191	7	5.3	2.9	R28	T63A4	0.6
183	15	5.8	5.5	R40	T56B2	0.7
183	15	5.7	2.5	R28	T56B2	0.5
138	20	7.4	3.9	R40	T56B2	0.6
138	20	7.3	1.6	R28	T56B2	0.4
134	10	7.5	5.6	R40	T63A4	0.9
134	10	7.3	2.3	R28	T63A4	0.5
126	7	8	5.5	R40	T63C6	0.9
126	7	7.8	2.3	R28	T63C6	0.6
98	28	9.7	3.5	R40	T56B2	0.5
98	28	9.4	1.6	R28	T56B2	0.3
89	15	10.7	3.9	R40	T63A4	0.7
89	15	10.4	1.7	R28	T63A4	0.5
88	10	11.1	4.4	R40	T63C6	0.8
88	10	10.9	1.8	R28	T63C6	0.5
69	40	12.7	2.5	R40	T56B2	0.4
69	40	12.5	1.0	R28	T56B2	0.3
67	20	14.1	5.3	R50	T63A4	1.0
67	20	13.5	2.7	R40	T63A4	0.6
67	20	13.4	1.1	R28	T63A4	0.4
63	44	16	3.1	CB40	T56B2	0.7
59	15	16.7	5.3	R50	T63C6	1.2
59	15	15.9	3.1	R40	T63C6	0.7
59	15	15.5	1.3	R28	T63C6	0.5
57	48	18.4	4.8	CB50	T56B2	1.2
56	49	14.8	2.0	R40	T56B2	0.4
56	49	14.5	0.8	R28	T56B2	0.3
55	50	18.2	2.7	CB40	T56B2	0.7
53	52	20	4.7	CB50	T56B2	1.2
49	56	16.3	1.7	R40	T56B2	0.4
49	56	16	0.8	R28	T56B2	0.2
48	28	18.2	4.4	R50	T63A4	0.8
48	28	17.4	2.5	R40	T63A4	0.5
48	28	16.6	1.1	R28	T63A4	0.3
47	58	21.2	2.5	CB40	T56B2	0.7
45	61	23.4	4.0	CB50	T56B2	1.2
44	20	20.9	4.1	R50	T63C6	0.9
44	20	19.8	2.2	R40	T63C6	0.6
44	20	19.5	0.9	R28	T63C6	0.4
40	68	24.5	2.3	CB40	T56B2	0.7
39	70	18	1.3	R40	T56B2	0.3
38	73	23.8	3.9	CB50	T56B2	0.8
34	80	19.5	1.1	R40	T56B2	0.3
34	40	24.4	3.3	R50	T63A4	0.7
34	40	22.2	1.8	R40	T63A4	0.4
34	40	21.9	0.7	R28	T63A4	0.3
33	83	25.8	1.9	CB40	T56B2	0.5
31	28	26.5	3.5	R50	T63C6	0.7
31	28	25.3	2.0	R40	T63C6	0.5
31	28	24.2	0.9	R28	T63C6	0.3
31	90	29.3	3.1	CB50	T56B2	0.8
30	44	29.7	2.0	CB40	T63A4	0.7
28	97	31.1	3.1	CB50	T56B2	0.8
28	48	34.3	3.1	CB50	T63A4	1.1
28	100	24.8	0.9	R40	T56B2	0.3
27	49	28.6	2.5	R50	T63A4	0.7
27	49	25.9	1.5	R40	T63A4	0.4
27	50	33.8	1.7	CB40	T63A4	0.7
26	51	35.9	5.7	CB70	T63A4	1.6
26	52	36.7	2.9	CB50	T63A4	1.1
25	109	33.4	1.6	CB40	T56B2	0.5
24	114	36.6	2.7	CB50	T56B2	0.8
24	56	31.1	2.2	R50	T63A4	0.6
24	56	28	1.3	R40	T63A4	0.4
23	58	38.2	1.7	CB40	T63A4	0.7
23	59	40.5	5.8	CB70	T63A4	1.6
22	40	35.6	2.6	R50	T63C6	0.7
22	40	31.6	1.4	R40	T63C6	0.4
22	61	42.9	2.5	CB50	T63A4	1.1
22	127	38.2	1.5	CB40	T56B2	0.5
20	44	46	5.1	CB70	T63C6	1.6
20	44	44	1.5	CB40	T63C6	0.7
19.7	68	44.7	1.5	CB40	T63A4	0.7
19.1	70	48	4.9	CB70	T63A4	1.6
19.1	70	36.3	1.8	R50	T63A4	0.6
19.1	70	30.6	0.9	R40	T63A4	0.3
18.4	73	43.3	2.5	CB50	T63A4	0.7

1.7 - Motoriduttori

n_2 min^{-1}	ir	T2 Nm	FS'		0.13 kW	Ptn kW
18.3	48	50.9	2.1	CB50	T63C6	1.0
18.0	49	40.8	2	R50	T63C6	0.6
18.0	49	36.5	1.2	R40	T63C6	0.4
17.6	50	50	1.3	CB40	T63C6	0.6
17.3	51	52.5	4.5	CB70	T63C6	1.5
16.9	52	54.4	2	CB50	T63C6	1.0
16.8	80	37.9	1.5	R50	T63A4	0.5
16.8	80	32.5	0.8	R40	T63A4	0.3
16.7	165	42.4	1	CB40	T56B2	0.4
16.2	170	48	1.8	CB50	T56B2	0.7
16.1	83	49.3	4.1	CB70	T63A4	1.2
16.1	83	47.1	1.3	CB40	T63A4	0.5
15.7	56	44.3	1.8	R50	T63C6	0.6
15.7	56	40.3	1	R40	T63C6	0.3
15.2	58	56.5	1.2	CB40	T63C6	0.6
14.9	59	59.9	4.4	CB70	T63C6	1.5
14.9	90	53.3	2	CB50	T63A4	0.7
14.4	61	63.6	1.7	CB50	T63C6	1.0
13.8	199	56	1.5	CB50	T56B2	0.6
13.8	97	55.6	2	CB50	T63A4	0.7
13.4	100	44.5	1.2	R50	T63A4	0.5
13.4	100	41.8	0.7	R40	T63A4	0.3
12.9	68	66.4	1.1	CB40	T63C6	0.6
12.6	70	71.1	3.7	CB70	T63C6	1.5
12.6	70	51.4	1.4	R50	T63C6	0.5
12.6	70	43.3	0.7	R40	T63C6	0.3
12.4	222	55.1	0.9	CB40	T56B2	0.4
12.3	109	59.5	1.1	CB40	T63A4	0.5
12.2	110	63.2	3.6	CB70	T63A4	1.2
12.1	73	63.8	1.7	CB50	T63C6	0.7
11.8	114	65.6	1.7	CB50	T63A4	0.7
11.0	80	70	6.2	CB85	T63C6	1.5
11.0	80	53	1.2	R50	T63C6	0.5
11.0	80	44.9	0.6	R40	T63C6	0.3
10.6	83	72.6	3.1	CB70	T63C6	1.2
10.6	83	69.3	0.9	CB40	T63C6	0.5
10.6	127	69.3	0.9	CB40	T63A4	0.5
10.5	262	56.2	1.1	CB50	T56B2	0.5
10.4	129	74.1	5.8	CB85	T63A4	1.5
10.3	130	74.7	3.1	CB70	T63A4	1.2
9.8	90	74.9	1.5	CB50	T63C6	0.7
9.6	140	76.6	6.5	40/85	T63A4	1.0
9.6	140	77.8	6.4	50/85	T63A4	1.5
9.6	140	72.6	3.7	40/70	T63A4	1.0
9.6	140	73.9	3.6	50/70	T63A4	1.5
9.6	140	74	3.2	40/63	T63A4	1.0
9.6	140	71.4	2.9	28/70	T63A4	0.6
9.6	140	72.7	2.8	28/63	T63A4	0.6
9.6	140	70.1	1.6	28/50	T63A4	0.6
9.6	140	72.6	1.5	40/50	T63A4	1.0
9.6	140	66	1	28/40	T63A4	0.6
9.6	140	67.6	0.9	40/40	T63A4	1.0
9.5	290	66.2	1.5	CB50	T56B2	0.6
9.1	97	80.8	1.4	CB50	T63C6	0.7
8.8	100	61.9	1	R50	T63C6	0.4
8.1	165	74.7	0.7	CB40	T63A4	0.4
8.1	166	86	2.6	CB70	T63A4	1.0
8.1	109	85.8	0.8	CB40	T63C6	0.4
8.0	110	91.5	5.2	CB85	T63C6	1.3
8.0	110	91.5	2.8	CB70	T63C6	1.0
8.0	168	90.2	4.3	CB85	T63A4	1.3
7.9	347	72.4	0.8	CB50	T56B2	0.5
7.9	170	83.7	1.2	CB50	T63A4	0.6
7.7	114	94.7	1.2	CB50	T63C6	0.7
6.9	127	100	0.7	CB40	T63C6	0.4
6.8	129	107.4	4.5	CB85	T63C6	1.3
6.8	130	108.3	2.3	CB70	T63C6	1.0
6.8	407	84.8	0.7	CB50	T56B2	0.5
6.7	199	97.7	1.1	CB50	T63A4	0.6
6.7	200	103.8	4.8	40/85	T63A4	0.9
6.7	200	105.7	4.7	50/85	T63A4	1.4
6.7	200	100	2.9	40/70	T63A4	0.9
6.7	200	101.9	2.8	50/70	T63A4	1.4
6.7	200	100	2.5	40/63	T63A4	0.9
6.7	200	98.1	2.3	28/70	T63A4	0.5
6.7	200	98.1	2.3	28/63	T63A4	0.5
6.7	200	96.6	1.1	28/50	T63A4	0.5
6.7	200	97.9	1.1	40/50	T63A4	0.9
6.7	200	91	0.8	28/40	T63A4	0.5
6.7	200	92.9	0.8	40/40	T63A4	0.9

1.7 - *Gearmotors*

n_2 min^{-1}	ir	T2 Nm	FS'		0.13 kW	Ptn kW
6.0	225	114.7	3.8	CB85	T63A4	1.3
5.9	228	112.1	2.2	CB70	T63A4	1.0
5.3	166	119.5	2.1	CB70	T63C6	0.8
5.2	168	123.3	3.9	CB85	T63C6	1.1
5.2	170	120.2	0.9	CB50	T63C6	0.5
5.1	262	97.5	0.6	CB50	T63A4	0.5
4.8	280	119.3	4.2	40/85	T63A4	0.9
4.8	280	121.7	4.1	50/85	T63A4	1.4
4.8	280	119.3	2.4	40/70	T63A4	0.9
4.8	280	122	2.4	50/70	T63A4	1.4
4.8	280	116.7	2.3	28/70	T63A4	0.5
4.8	280	119	2.1	28/63	T63A4	0.5
4.8	280	121.7	2.1	40/63	T63A4	0.9
4.8	280	119.2	0.9	28/50	T63A4	0.5
4.8	280	122.2	0.9	40/50	T63A4	0.9
4.8	280	111	0.6	28/40	T63A4	0.5
4.8	280	116.7	0.6	40/40	T63A4	0.9
4.7	286	116.3	2.4	CB85	T63A4	1.0
4.6	290	134.9	0.8	CB50	T63A4	0.6
4.5	295	117.3	1.4	CB70	T63A4	0.7
4.4	303	137.5	2	CB70	T63A4	0.7
4.4	199	140.2	0.8	CB50	T63C6	0.5
4	339	134.9	1.2	CB70	T63A4	0.7
3.9	342	139.4	2	CB85	T63A4	1.0
3.9	225	165.1	2.9	CB85	T63C6	1.1
3.9	228	160.9	1.7	CB70	T63C6	0.8
3.4	394	153.2	2	CB85	T63A4	1.0
3.4	394	145.8	1.2	CB70	T63A4	0.7
3.4	400	192.6	5.2	50/110	T63A4	1.0
3.4	400	181.6	2.8	40/85	T63A4	0.6
3.4	400	189	2.6	50/85	T63A4	1.0
3.4	400	174.1	1.8	40/70	T63A4	0.6
3.4	400	181.7	1.8	50/70	T63A4	1.0
3.4	400	173.8	1.4	40/63	T63A4	0.6
3.4	400	171	1.1	28/63	T63A4	0.4
3.4	400	171	1.1	28/70	T63A4	0.4
3.4	400	170.2	0.6	28/50	T63A4	0.4
3.4	400	174.4	0.6	40/50	T63A4	0.6
3.1	286	169.6	1.8	CB85	T63C6	1.0
3	295	166.1	1.1	CB70	T63C6	0.7
2.9	460	178.8	1.7	CB85	T63A4	1.0
2.9	303	201.6	1.4	CB70	T63C6	0.7
2.9	464	172.3	1	CB70	T63A4	0.7
2.7	323	242	5.9	CB130	T63C6	2.2
2.7	504	233.5	5.8	CB130	T63A4	2.2
2.6	339	182	1	CB70	T63C6	0.7
2.6	342	188.1	1.7	CB85	T63C6	0.9
2.3	576	261	4.9	CB130	T63A4	2.2
2.2	600	244.8	4.1	50/110	T63A4	1.2
2.2	600	222.6	2.2	40/85	T63A4	0.7
2.2	600	233.8	2.1	50/85	T63A4	1.2
2.2	394	216.9	1.5	CB85	T63C6	0.9
2.2	600	211.8	1.5	28/70	T63A4	0.5
2.2	600	217.4	1.5	40/70	T63A4	0.7
2.2	600	228.2	1.4	50/70	T63A4	1.2
2.2	600	211	1.2	28/63	T63A4	0.5
2.2	600	216.7	1.2	40/63	T63A4	0.7
2.2	394	206.9	0.9	CB70	T63C6	0.7
2.2	403	296.2	5	CB130	T63C6	2.2
2.2	618	205.1	0.9	CB70	T63A4	0.7
1.9	460	253	1.3	CB85	T63C6	0.9
1.9	464	242.8	0.8	CB70	T63C6	0.7
1.9	720	307	5.5	CB150	T63A4	2.7
1.9	720	293.5	3.8	CB130	T63A4	2.0
1.8	504	347.5	6.2	CB150	T63C6	2.9
1.8	504	340.7	4.3	CB130	T63C6	2.0
1.5	576	381.2	5.4	CB150	T63C6	2.8
1.5	576	381.2	3.7	CB130	T63C6	2.0
1.4	618	305.5	0.6	CB70	T63C6	0.7
1.4	980	371.4	2.7	50/110	T63A4	0.7
1.4	980	335.1	1.5	40/85	T63A4	0.4
1.4	980	371.4	1.3	50/85	T63A4	0.7
1.4	980	317.6	1	40/70	T63A4	0.4
1.4	980	352.5	0.9	50/70	T63A4	0.7
1.4	980	325	0.8	40/63	T63A4	0.4
1.2	720	448	4.1	CB150	T63C6	2.6
1.2	720	427.2	2.8	CB130	T63C6	1.8
1.2	750	466.8	6.3	CB180	T63C6	3.6
0.98	1372	430.5	2.3	50/110	T63A4	0.7
0.98	1372	367.2	1.4	40/85	T63A4	0.4

1.7 - Getriebemotoren

n_2 min^{-1}	ir	T2 Nm	FS'		0.13 kW	Ptn kW
0.98	1372	406.2	1.2	50/85	T63A4	0.7
0.98	1372	381.7	0.8	40/70	T63A4	0.4
0.98	1372	416	0.8	50/70	T63A4	0.7
0.98	1372	377.9	0.7	40/63	T63A4	0.4
0.68	1960	583	1.7	50/110	T63A4	0.7
0.68	1960	492.4	1	40/85	T63A4	0.4
0.68	1960	546.2	0.9	50/85	T63A4	0.7
0.68	1960	495.2	0.6	40/70	T63A4	0.4
0.48	2800	698.9	1.4	50/110	T63A4	0.6
0.48	2800	570.2	0.9	40/85	T63A4	0.3
0.48	2800	670.1	0.7	50/85	T63A4	0.6
0.34	4000	838.7	1.2	50/110	T63A4	0.5
0.34	4000	764.7	0.7	40/85	T63A4	0.3
0.34	4000	802.5	0.6	50/85	T63A4	0.5
0.24	5600	1083	0.9	50/110	T63A4	0.5
0.19	7000	1236	0.8	50/110	T63A4	0.5
0.17	8000	1315	0.7	50/110	T63A4	0.5

1.7 - Motoriduttori

n_2 min^{-1}	ir	T2 Nm	FS'		0.18 kW	Ptn kW
554	5	2.7	10	R40	T63A2	1.1
396	7	3.6	3.1	R28	T63A2	0.6
277	10	5.2	6	R40	T63A2	0.9
277	10	5	2.6	R28	T63A2	0.5
272	5	5.4	6.8	R40	T63B4	1.1
194	7	7.3	5	R40	T63B4	1
194	7	7.2	2.1	R28	T63B4	0.6
185	15	7.5	4.3	R40	T63A2	0.7
185	15	7.3	1.9	R28	T63A2	0.5
139	20	9.8	5.8	R50	T63A2	1
139	20	9.4	3.1	R40	T63A2	0.6
139	20	9.3	1.3	R28	T63A2	0.4
136	10	10.2	4.1	R40	T63B4	0.9
136	10	10	1.7	R28	T63B4	0.5
133	7	10.5	4.2	R40	T71A6	0.9
99	28	12.9	4.8	R50	T63A2	0.8
99	28	12.3	2.8	R40	T63A2	0.5
99	28	12	1.3	R28	T63A2	0.3
93	10	15	5.7	R50	T71A6	1.3
93	10	14.6	3.4	R40	T71A6	0.8
91	15	15.2	5	R50	T63B4	1.2
91	15	14.6	2.9	R40	T63B4	0.7
91	15	14.2	1.3	R28	T63B4	0.5
69	40	17.4	3.7	R50	T63A2	0.7
69	40	16.1	2	R40	T63A2	0.4
69	40	15.9	0.8	R28	T63A2	0.3
68	20	19.2	3.9	R50	T63B4	1
68	20	18.4	2	R40	T63B4	0.6
68	20	18.2	0.8	R28	T63B4	0.4
63	44	20.5	2.4	CB40	T63A2	0.7
62	15	21.9	4.1	R50	T71A6	1.2
62	15	20.8	2.4	R40	T71A6	0.7
58	48	23.5	3.8	CB50	T63A2	1.2
57	49	20.4	2.8	R50	T63A2	0.7
57	49	18.9	1.6	R40	T63A2	0.4
55	50	23.3	2.1	CB40	T63A2	0.7
53	52	25.5	3.7	CB50	T63A2	1.2
49	56	22.6	2.4	R50	T63A2	0.6
49	56	20.8	1.3	R40	T63A2	0.4
49	28	24.8	3.2	R50	T63B4	0.8
49	28	23.7	1.8	R40	T63B4	0.5
49	28	22.6	0.8	R28	T63B4	0.3
48	58	27	1.9	CB40	T63A2	0.7
47	59	28.6	6.3	CB70	T63A2	1.8
47	20	27.7	5.7	R63	T71A6	1.4
47	20	27.3	3.1	R50	T71A6	0.9
47	20	25.9	1.7	R40	T71A6	0.6
45	61	29.9	3.1	CB50	T63A2	1.2
41	68	31.2	1.8	CB40	T63A2	0.7
40	70	33.4	5.8	CB70	T63A2	1.8
40	70	26.5	2	R50	T63A2	0.6
40	70	23	1	R40	T63A2	0.3
38	73	30.3	3	CB50	T63A2	0.8
35	80	28.3	1.7	R50	T63A2	0.5
35	80	24.9	0.8	R40	T63A2	0.3
34	40	33.4	2.4	R50	T63B4	0.7
34	40	30.4	1.3	R40	T63B4	0.4
33	83	35	4.9	CB70	T63A2	1.3
33	83	33	1.5	CB40	T63A2	0.5
33	28	35.2	4.4	R63	T71A6	1.1
33	28	34.6	2.7	R50	T71A6	0.7
33	28	33.1	1.5	R40	T71A6	0.5
31	44	42.3	4.9	CB70	T63B4	1.6
31	44	40.5	1.5	CB40	T63B4	0.7
31	90	37.4	2.5	CB50	T63A2	0.8
29	97	39.7	2.4	CB50	T63A2	0.8
28	48	46.8	2.3	CB50	T63B4	1.1
28	49	39	1.8	R50	T63B4	0.7
28	49	35.3	1.1	R40	T63B4	0.4
28	100	33.5	1.3	R50	T63A2	0.5
28	100	31.6	0.7	R40	T63A2	0.3
27	50	46.2	1.3	CB40	T63B4	0.7
27	51	49	4.2	CB70	T63B4	1.6
26	52	50	2.2	CB50	T63B4	1.1
25	109	42.5	1.2	CB40	T63A2	0.5
25	110	45.8	3.9	CB70	T63A2	1.3
24	114	46.7	2.1	CB50	T63A2	0.8
24	56	42.5	1.6	R50	T63B4	0.6
24	56	38.1	0.9	R40	T63B4	0.4
23	58	52	1.3	CB40	T63B4	0.7

1.7 - *Gearmotors*

n_2 min^{-1}	ir	T2 Nm	FS'		0.18 kW	Ptn kW
23	40	47.3	3.9	R70	T71A6	1.1
23	40	47.4	3.5	R63	T71A6	1
23	40	46.5	2	R50	T71A6	0.7
23	40	41.3	1.1	R40	T71A6	0.4
23	59	55.2	4.2	CB70	T63B4	1.6
22	61	58.6	1.8	CB50	T63B4	1.1
22	127	48.9	1.1	CB40	T63A2	0.5
21	130	53.2	3.6	CB70	T63A2	1.3
21	44	60.2	3.9	CB70	T71A6	1.6
20	68	60.9	1.1	CB40	T63B4	0.7
19.4	70	65.5	3.6	CB70	T63B4	1.6
19.4	70	49.4	1.3	R50	T63B4	0.6
19.4	70	41.7	0.7	R40	T63B4	0.3
19.4	48	66.6	1.6	CB50	T71A6	1
19	49	54.4	3.5	R70	T71A6	1
19	49	55.2	2.6	R63	T71A6	0.9
19	49	53.5	1.5	R50	T71A6	0.6
19	49	48.1	0.9	R40	T71A6	0.4
18.6	73	59.1	1.8	CB50	T63B4	0.7
18.2	51	68.8	3.4	CB70	T71A6	1.5
17.9	52	71.2	1.5	CB50	T71A6	1
17	80	65.8	5.8	CB85	T63B4	1.5
17	80	51.7	1.1	R50	T63B4	0.5
16.8	165	54.1	0.8	CB40	T63A2	0.4
16.7	166	61.8	3.1	CB70	T63A2	1
16.6	56	60	3.2	R70	T71A6	0.9
16.6	56	60	2.4	R63	T71A6	0.8
16.6	56	58	1.3	R50	T71A6	0.6
16.6	56	52.9	0.8	R40	T71A6	0.3
16.5	168	64.7	5.1	CB85	T63A2	1.4
16.4	83	67.1	3	CB70	T63B4	1.2
16.4	83	64	0.9	CB40	T63B4	0.5
16.3	170	61.2	1.4	CB50	T63A2	0.7
15.8	59	79.6	6.3	CB85	T71A6	2
15.8	59	78.5	3.4	CB70	T71A6	1.5
15.3	61	83.5	1.3	CB50	T71A6	1
15.1	90	72.9	1.5	CB50	T63B4	0.7
14	97	76.2	1.4	CB50	T63B4	0.7
13.9	199	71.7	1.2	CB50	T63A2	0.6
13.6	100	60.8	0.9	R50	T63B4	0.5
13.5	69	93.1	5.4	CB85	T71A6	2
13.3	70	93.2	2.8	CB70	T71A6	1.5
13.3	70	69.8	2.4	R70	T71A6	0.8
13.3	70	69.8	1.9	R63	T71A6	0.8
13.3	70	67.2	1.1	R50	T71A6	0.5
12.7	73	83.5	1.3	CB50	T71A6	0.7
12.5	109	81.2	0.8	CB40	T63B4	0.5
12.5	222	70.2	0.7	CB40	T63A2	0.4
12.4	110	86.2	5	CB85	T63B4	1.5
12.4	110	86.2	2.6	CB70	T63B4	1.2
12.3	225	83.8	4.1	CB85	T63A2	1.4
12.2	228	80.7	2.6	CB70	T63A2	1
11.9	114	89.2	1.2	CB50	T63B4	0.7
11.6	80	91.7	4.7	CB85	T71A6	1.5
11.6	80	74	2.2	R70	T71A6	0.8
11.6	80	75.4	1.6	R63	T71A6	0.7
11.6	80	69.5	1	R50	T71A6	0.5
11.2	83	95.2	2.4	CB70	T71A6	1.2
10.7	127	94.4	0.7	CB40	T63B4	0.5
10.6	262	71.8	0.8	CB50	T63A2	0.5
10.5	129	101.1	4.3	CB85	T63B4	1.5
10.5	130	101.8	2.2	CB70	T63B4	1.2
10.3	90	98	1.1	CB50	T71A6	0.7
9.7	140	104.4	4.8	40/85	T63B4	1
9.7	140	106.3	4.7	50/85	T63B4	1.5
9.7	140	99.1	2.7	40/70	T63B4	1
9.7	140	101	2.6	50/70	T63B4	1.5
9.7	140	100.8	2.4	40/63	T63B4	1
9.7	140	97.3	2.1	28/70	T63B4	0.6
9.7	140	99.1	2.1	28/63	T63B4	0.6
9.7	140	95.7	1.2	28/50	T63B4	0.6
9.7	140	99	1.1	40/50	T63B4	1
9.7	140	90	0.7	28/40	T63B4	0.6
9.7	140	92.2	0.7	40/40	T63B4	1
9.7	286	88.7	2.7	CB85	T63A2	1.1
9.6	97	105.9	1	CB50	T71A6	0.7
9.6	290	84.7	1.1	CB50	T63A2	0.6
9.4	295	86.1	1.7	CB70	T63A2	0.8
9.3	100	87	1.7	R70	T71A6	0.7
9.3	100	86.9	1.3	R63	T71A6	0.7

1.7 - Getriebemotoren

n_2 min^{-1}	ir	T2 Nm	FS'		0.18 kW	Ptn kW
9.3	100	81.1	0.7	R50	T71A6	0.4
9.1	303	96	2.3	CB70	T63A2	0.8
8.5	110	120	4	CB85	T71A6	1.3
8.5	110	120	2.1	CB70	T71A6	1
8.2	166	117.4	1.9	CB70	T63B4	1
8.2	339	98.9	1.5	CB70	T63A2	0.8
8.2	114	124.5	0.9	CB50	T71A6	0.7
8.1	168	123.1	3.1	CB85	T63B4	1.3
8.1	342	106.2	2.3	CB85	T63A2	1.1
8	170	113.7	0.9	CB50	T63B4	0.6
8	347	92.3	0.7	CB50	T63A2	0.5
7.2	129	140.7	3.4	CB85	T71A6	1.3
7.2	130	142	1.8	CB70	T71A6	1
7	394	117.4	2.2	CB85	T63A2	1
7	394	112.3	1.3	CB70	T63A2	0.8
6.8	199	133.4	0.8	CB50	T63B4	0.6
6.8	200	141.5	3.5	40/85	T63B4	0.9
6.8	200	144	3.5	50/85	T63B4	1.4
6.8	200	136.6	2.1	40/70	T63B4	0.9
6.8	200	139.2	2.1	50/70	T63B4	1.4
6.8	200	136.4	1.8	40/63	T63B4	0.9
6.8	200	134.1	1.7	28/70	T63B4	0.5
6.8	200	134.1	1.7	28/63	T63B4	0.5
6.8	200	131.1	0.8	28/50	T63B4	0.5
6.8	200	133.8	0.8	40/50	T63B4	0.9
6	225	156.6	2.8	CB85	T63B4	1.3
6	460	131.4	2	CB85	T63A2	1
6	464	129.5	1.2	CB70	T63A2	0.8
6	228	153.1	1.6	CB70	T63B4	1
5.6	166	156.8	1.6	CB70	T71A6	0.8
5.5	168	161.5	3	CB85	T71A6	1.1
5.5	170	157.1	0.7	CB50	T71A6	0.5
4.9	280	176.8	5.7	50/110	T63B4	1.4
4.9	280	162.7	3.1	40/85	T63B4	0.9
4.9	280	166.4	3	50/85	T63B4	1.4
4.9	280	162.6	1.8	40/70	T63B4	0.9
4.9	280	166.2	1.7	50/70	T63B4	1.4
4.9	280	159.4	1.7	28/70	T63B4	0.5
4.9	280	162.5	1.5	28/63	T63B4	0.5
4.9	280	166.1	1.5	40/63	T63B4	0.9
4.9	280	162.3	0.7	28/50	T63B4	0.5
4.9	280	166.4	0.7	40/50	T63B4	0.9
4.8	576	185.9	5.9	CB130	T63A2	2.3
4.8	286	159.1	1.8	CB85	T63B4	1
4.7	290	183.3	0.6	CB50	T63B4	0.6
4.7	199	183.3	0.6	CB50	T71A6	0.5
4.6	295	160.6	1	CB70	T63B4	0.7
4.5	303	187.5	1.5	CB70	T63B4	0.7
4.5	618	165.1	1	CB70	T63A2	0.8
4.2	323	228.6	5.7	CB130	T63B4	2.5
4.1	225	216.5	2.2	CB85	T71A6	1.1
4.1	228	210.5	1.3	CB70	T71A6	0.8
4	339	184.4	0.9	CB70	T63B4	0.7
4	342	190.2	1.5	CB85	T63B4	1
3.9	720	223.2	6.5	CB150	T63A2	3
3.9	720	214.4	4.5	CB130	T63A2	2.2
3.5	394	209.7	1.5	CB85	T63B4	1
3.5	394	199.4	0.9	CB70	T63B4	0.7
3.4	400	262.8	3.8	50/110	T63B4	1
3.4	400	247.9	2	40/85	T63B4	0.6
3.4	400	257.9	1.9	50/85	T63B4	1
3.4	400	238	1.3	40/70	T63B4	0.6
3.4	400	247.2	1.3	50/70	T63B4	1
3.4	400	238.1	1.1	40/63	T63B4	0.6
3.4	400	231.9	0.8	28/70	T63B4	0.4
3.4	400	231.9	0.8	28/63	T63B4	0.4
3.4	403	275.4	5	CB130	T63B4	2.4
3.3	286	222.4	1.4	CB85	T71A6	1
3.2	288	292.6	5.9	CB130	T71A6	2.3
3.2	295	218.8	0.8	CB70	T71A6	0.7
3.1	303	263.6	1.1	CB70	T71A6	0.7
3	460	244.3	1.2	CB85	T63B4	1
2.9	464	235.1	0.7	CB70	T63B4	0.7
2.9	323	316.5	4.5	CB130	T71A6	2.2
2.7	339	238.6	0.7	CB70	T71A6	0.7
2.7	342	246.3	1.3	CB85	T71A6	0.9
2.7	504	324.7	6.1	CB150	T63B4	3
2.7	504	318.2	4.2	CB130	T63B4	2.2
2.4	576	364.1	5.2	CB150	T63B4	3
2.4	576	356.9	3.6	CB130	T63B4	2.2

1.7 - Motoriduttori

n_2 min^{-1}	ir	T2 Nm	FS'		0.18 kW	Ptn kW
2.4	394	284.3	1.2	CB85	T71A6	0.9
2.4	394	270	0.7	CB70	T71A6	0.7
2.3	403	401.8	6	CB150	T71A6	3.2
2.3	403	387	3.9	CB130	T71A6	2.2
2.3	600	333.3	3	50/110	T63B4	1.2
2.3	600	303	1.7	40/85	T63B4	0.7
2.3	600	318	1.6	50/85	T63B4	1.2
2.3	600	287.3	1.1	28/70	T63B4	0.5
2.3	600	294.7	1.1	40/70	T63B4	0.7
2.3	600	310.8	1	50/70	T63B4	1.2
2.3	600	288.5	0.9	28/63	T63B4	0.5
2.3	600	296.1	0.8	40/63	T63B4	0.7
2.2	618	281.5	0.7	CB70	T63B4	0.7
2	460	332.5	1	CB85	T71A6	0.9
1.9	720	418.6	4	CB150	T63B4	2.7
1.9	720	399.9	2.8	CB130	T63B4	2
1.9	504	455.3	4.8	CB150	T71A6	2.9
1.9	504	446.2	3.3	CB130	T71A6	2
1.8	750	436.9	6.2	CB180	T63B4	3.8
1.6	576	501.9	4.1	CB150	T71A6	2.8
1.6	576	501.5	2.8	CB130	T71A6	2
1.6	600	532.1	6.2	CB180	T71A6	3.9
1.4	980	507	2	50/110	T63B4	0.7
1.4	980	456.9	1.1	40/85	T63B4	0.4
1.4	980	508.5	1	50/85	T63B4	0.7
1.4	980	433.1	0.7	40/70	T63B4	0.4
1.4	980	484	0.7	50/70	T63B4	0.7
1.3	720	586	3.1	CB150	T71A6	2.6
1.3	720	559.5	2.2	CB130	T71A6	1.8
1.2	750	609.9	4.8	CB180	T71A6	3.6
0.99	1372	590.2	1.7	50/110	T63B4	0.7
0.99	1372	502.8	1	40/85	T63B4	0.4
0.99	1372	555.6	0.9	50/85	T63B4	0.7
0.99	1372	518.9	0.6	40/70	T63B4	0.4
0.69	1960	796.5	1.3	50/110	T63B4	0.7
0.69	1960	671.6	0.7	40/85	T63B4	0.4
0.69	1960	750	0.7	50/85	T63B4	0.7
0.49	2800	947.4	1.1	50/110	T63B4	0.6
0.49	2800	769.2	0.7	40/85	T63B4	0.3
0.34	4000	1161	0.9	50/110	T63B4	0.5
0.24	5600	1500	0.7	50/110	T63B4	0.5

1.7 - *Gearmotors*

n_2 min^{-1}	ir	T2 Nm	FS'		0.22 kW	Ptn kW
272	5	6.6	5.6	R40	T63C4	1.1
194	7	9	4.1	R40	T63C4	1
194	7	8.8	1.7	R28	T63C4	0.6
136	10	12.7	5.8	R50	T63C4	1.4
136	10	12.5	3.4	R40	T63C4	0.9
136	10	12.2	1.4	R28	T63C4	0.5
91	15	18.5	4.1	R50	T63C4	1.2
91	15	17.8	2.4	R40	T63C4	0.7
91	15	17.4	1	R28	T63C4	0.5
68	20	23.5	3.2	R50	T63C4	1
68	20	22.5	1.6	R40	T63C4	0.6
68	20	22.3	0.7	R28	T63C4	0.4
49	28	30.3	2.6	R50	T63C4	0.8
49	28	29	1.5	R40	T63C4	0.5
49	28	27.7	0.7	R28	T63C4	0.3
34	40	40.8	2	R50	T63C4	0.7
34	40	37.1	1.1	R40	T63C4	0.4
31	44	51.7	4	CB70	T63C4	1.6
31	44	49.5	1.2	CB40	T63C4	0.7
28	48	57.2	1.9	CB50	T63C4	1.1
28	49	47.7	1.5	R50	T63C4	0.7
28	49	43.1	0.9	R40	T63C4	0.4
27	50	56.4	1	CB40	T63C4	0.7
27	51	59.9	3.4	CB70	T63C4	1.6
26	52	61.1	1.8	CB50	T63C4	1.1
24	56	52	1.3	R50	T63C4	0.6
24	56	46.6	0.8	R40	T63C4	0.4
23	58	63.6	1	CB40	T63C4	0.7
23	59	67.5	3.5	CB70	T63C4	1.6
22	61	71.6	1.5	CB50	T63C4	1.1
20	68	74.5	0.9	CB40	T63C4	0.7
20	69	79.9	5.7	CB85	T63C4	2.2
19	70	80.1	2.9	CB70	T63C4	1.6
19	70	60.4	1.1	R50	T63C4	0.6
19	73	72.2	1.5	CB50	T63C4	0.7
17	80	80.4	4.7	CB85	T63C4	1.5
17	80	63.2	0.9	R50	T63C4	0.5
16	83	82	2.5	CB70	T63C4	1.2
16	83	78.2	0.8	CB40	T63C4	0.5
15	90	89.1	1.2	CB50	T63C4	0.7
14	97	93.1	1.2	CB50	T63C4	0.7
14	100	74.3	0.7	R50	T63C4	0.5
12	109	99.3	0.7	CB40	T63C4	0.5
12	110	105.4	4.1	CB85	T63C4	1.5
12	110	105.4	2.2	CB70	T63C4	1.2
12	114	109	1	CB50	T63C4	0.7
11	129	123.6	3.5	CB85	T63C4	1.5
10	130	124.5	1.8	CB70	T63C4	1.2
10	140	127.6	3.9	40/85	T63C4	1
10	140	129.9	3.9	50/85	T63C4	1.5
10	140	121.2	2.2	40/70	T63C4	1
10	140	123.5	2.2	50/70	T63C4	1.5
10	140	123.2	1.9	40/63	T63C4	1
10	140	118.9	1.7	28/70	T63C4	0.6
10	140	121.1	1.7	28/63	T63C4	0.6
10	140	116.9	0.9	28/50	T63C4	0.6
10	140	121	0.9	40/50	T63C4	1
8	166	143.5	1.6	CB70	T63C4	1
8	168	150.4	2.6	CB85	T63C4	1.3
8	170	139	0.7	CB50	T63C4	0.6
7	199	163	0.6	CB50	T63C4	0.6
7	200	179.2	5.6	50/110	T63C4	1.4
7	200	173	2.9	40/85	T63C4	0.9
7	200	176	2.8	50/85	T63C4	1.4
7	200	167	1.7	40/70	T63C4	0.9
7	200	170.1	1.7	50/70	T63C4	1.4
7	200	166.7	1.5	40/63	T63C4	0.9
7	200	163.9	1.4	28/63	T63C4	0.5
7	200	163.9	1.4	28/70	T63C4	0.5
7	200	160.3	0.7	28/50	T63C4	0.5
7	200	163.5	0.7	40/50	T63C4	0.9
6	225	191.3	2.3	CB85	T63C4	1.3
6	228	187.1	1.3	CB70	T63C4	1
5	280	216.1	4.6	50/110	T63C4	1.4
5	280	198.9	2.5	40/85	T63C4	0.9
5	280	203.3	2.5	50/85	T63C4	1.4
5	280	198.8	1.5	40/70	T63C4	0.9
5	280	203.2	1.4	50/70	T63C4	1.4
5	280	194.8	1.4	28/70	T63C4	0.5
5	280	198.6	1.3	28/63	T63C4	0.5

1.7 - Getriebemotoren

n_2 min^{-1}	ir	T2 Nm	FS'		0.22 kW	Ptn kW
5	280	203	1.2	40/63	T63C4	0.9
5	286	194.4	1.4	CB85	T63C4	1
5	288	253.7	6.2	CB130	T63C4	2.6
5	295	196.3	0.8	CB70	T63C4	0.7
4	303	229.1	1.2	CB70	T63C4	0.7
4	323	279.4	4.7	CB130	T63C4	2.5
4	339	225.4	0.7	CB70	T63C4	0.7
4	342	232.4	1.2	CB85	T63C4	1
3	394	256.2	1.2	CB85	T63C4	1
3.5	394	243.7	0.7	CB70	T63C4	0.7
3.4	400	321.2	3.1	50/110	T63C4	1
3.4	400	303	1.7	40/85	T63C4	0.6
3.4	400	315.2	1.6	50/85	T63C4	1
3.4	400	290.9	1.1	40/70	T63C4	0.6
3.4	400	302.1	1.1	50/70	T63C4	1
3.4	400	291	0.9	40/63	T63C4	0.6
3.4	400	283.5	0.7	28/63	T63C4	0.4
3.4	400	283.5	0.7	28/70	T63C4	0.4
3.4	403	349	6.4	CB150	T63C4	3.4
3.4	403	336.5	4.1	CB130	T63C4	2.4
3	460	298.6	1	CB85	T63C4	1
2.9	464	287.3	0.6	CB70	T63C4	0.7
2.7	504	396.8	5	CB150	T63C4	3
2.7	504	388.9	3.5	CB130	T63C4	2.2
2.4	576	445	4.2	CB150	T63C4	3
2.4	576	436.3	2.9	CB130	T63C4	2.2
2.3	600	471.9	6.5	CB180	T63C4	4.2
2.3	600	407.4	2.5	50/110	T63C4	1.2
2.3	600	370.4	1.4	40/85	T63C4	0.7
2.3	600	388.7	1.3	50/85	T63C4	1.2
2.3	600	351.1	0.9	28/70	T63C4	0.5
2.3	600	360.2	0.9	40/70	T63C4	0.7
2.3	600	379.9	0.8	50/70	T63C4	1.2
2.3	600	352.6	0.7	28/63	T63C4	0.5
2.3	600	361.8	0.7	40/63	T63C4	0.7
1.9	720	511.6	3.3	CB150	T63C4	2.7
1.9	720	488.7	2.3	CB130	T63C4	2
1.8	750	534	5.1	CB180	T63C4	3.8
1.4	980	619.7	1.6	50/110	T63C4	0.7
1.4	980	558.4	0.9	40/85	T63C4	0.4
1.4	980	621.5	0.8	50/85	T63C4	0.7
1.4	980	529.3	0.6	40/70	T63C4	0.4
1	1372	721.3	1.4	50/110	T63C4	0.7
1	1372	614.5	0.8	40/85	T63C4	0.4
1	1372	679	0.7	50/85	T63C4	0.7
0.69	1960	973.5	1	50/110	T63C4	0.7
0.69	1960	820.9	0.6	40/85	T63C4	0.4
0.49	2800	1158	0.9	50/110	T63C4	0.6
0.34	4000	1419	0.7	50/110	T63C4	0.5

1.7 - Motoriduttori

n_2 min^{-1}	ir	T2 Nm	FS'		0.25 kW	Ptn kW
564	5	3.6	7.5	R40	T63B2	1.1
403	7	5.0	5.4	R40	T63B2	1.0
403	7	4.9	2.2	R28	T63B2	0.6
282	5	7.2	5.1	R40	T71A4	1.1
282	10	7.0	4.4	R40	T63B2	0.9
282	10	6.9	1.9	R28	T63B2	0.5
201	7	9.8	3.8	R40	T71A4	1
188	15	10.4	5.6	R50	T63B2	1.2
188	15	10.2	3.1	R40	T63B2	0.7
188	15	9.9	1.4	R28	T63B2	0.5
141	10	13.9	5.3	R50	T71A4	1.4
141	20	13.4	4.3	R50	T63B2	1
141	10	13.7	3.1	R40	T71A4	0.9
141	20	12.9	2.3	R40	T63B2	0.6
141	20	12.7	0.9	R28	T63B2	0.4
126	7	15.8	5.1	R50	T71B6	1.4
126	7	15.4	2.9	R40	T71B6	0.9
101	28	17.5	3.5	R50	T63B2	0.8
101	28	16.8	2	R40	T63B2	0.5
101	28	16.4	0.9	R28	T63B2	0.3
94	15	20.3	6.4	R63	T71A4	1.7
94	15	20.3	3.7	R50	T71A4	1.2
94	15	19.6	2.1	R40	T71A4	0.7
88	10	22	3.9	R50	T71B6	1.3
88	10	21.4	2.3	R40	T71B6	0.8
71	20	26.1	5.2	R63	T71A4	1.5
71	20	25.7	2.9	R50	T71A4	1
71	40	23.7	2.7	R50	T63B2	0.7
71	20	24.7	1.5	R40	T71A4	0.6
71	40	22	1.5	R40	T63B2	0.4
71	40	21.7	0.6	R28	T63B2	0.3
64	44	29	5.9	CB70	T63B2	1.8
64	44	28	1.8	CB40	T63B2	0.7
59	48	32.1	2.8	CB50	T63B2	1.2
59	15	31.7	4.8	R63	T71B6	1.6
59	15	32.2	2.8	R50	T71B6	1.2
59	15	30.5	1.6	R40	T71B6	0.7
58	49	27.8	2.1	R50	T63B2	0.7
58	49	25.7	1.2	R40	T63B2	0.4
56	50	31.7	1.5	CB40	T63B2	0.7
55	51	33.7	5	CB70	T63B2	1.8
54	52	34.8	2.7	CB50	T63B2	1.2
50	28	33.6	4	R63	T71A4	1.2
50	28	33.2	2.4	R50	T71A4	0.8
50	56	30.8	1.8	R50	T63B2	0.6
50	28	31.8	1.4	R40	T71A4	0.5
50	56	28.5	1	R40	T63B2	0.4
49	58	36.8	1.4	CB40	T63B2	0.7
48	59	39	4.6	CB70	T63B2	1.8
46	61	40.8	2.3	CB50	T63B2	1.2
44	20	40.7	3.9	R63	T71B6	1.4
44	20	40.2	2.1	R50	T71B6	0.9
44	20	38	1.1	R40	T71B6	0.6
41	68	42.6	1.3	CB40	T63B2	0.7
40	70	45.6	4.2	CB70	T63B2	1.8
40	70	36.1	1.4	R50	T63B2	0.6
40	70	31.4	0.7	R40	T63B2	0.3
39	73	41.4	2.2	CB50	T63B2	0.8
35	40	45.4	3.6	R70	T71A4	1.2
35	40	45.4	3.2	R63	T71A4	1.1
35	40	44.7	1.8	R50	T71A4	0.7
35	80	38.7	1.2	R50	T63B2	0.5
35	40	40.7	1	R40	T71A4	0.4
35	80	33.9	0.6	R40	T63B2	0.3
34	83	47.8	3.6	CB70	T63B2	1.3
34	83	45	1.1	CB40	T63B2	0.5
32	44	56.6	3.6	CB70	T71A4	1.6
31	28	51.7	3	R63	T71B6	1.1
31	28	50.9	1.8	R50	T71B6	0.7
31	28	48.6	1	R40	T71B6	0.5
31	90	51.1	1.8	CB50	T63B2	0.8
29	48	62.5	1.7	CB50	T71A4	1.1
29	97	54.3	1.8	CB50	T63B2	0.8
29	49	53.1	3.1	R70	T71A4	1.1
29	49	53.1	2.4	R63	T71A4	1
29	49	52.3	1.4	R50	T71A4	0.7
29	49	47.3	0.8	R40	T71A4	0.4
28	100	45.7	0.9	R50	T63B2	0.5
28	51	66.5	6.1	CB85	T71A4	2.2
28	51	65.6	3.1	CB70	T71A4	1.6
27	52	66.8	1.6	CB50	T71A4	1.1
26	109	58.0	0.9	CB40	T63B2	0.5

1.7 - *Gearmotors*

n_2 min^{-1}	ir	T2 Nm	FS'		0.25 kW	Ptn kW
26	110	63.3	5.3	CB85	T63B2	1.7
26	110	62.4	2.9	CB70	T63B2	1.3
25	56	58.8	2.8	R70	T71A4	1.0
25	56	58.8	2.2	R63	T71A4	0.9
25	56	56.9	1.2	R50	T71A4	0.6
25	56	51.1	0.7	R40	T71A4	0.4
25	114	63.6	1.5	CB50	T63B2	0.8
24	59	74.9	6.0	CB85	T71A4	2.2
24	59	74.0	3.2	CB70	T71A4	1.6
23	61	78.5	1.4	CB50	T71A4	1.1
22	127	66.7	0.8	CB40	T63B2	0.5
22	40	69.4	2.7	R70	T71B6	1.1
22	40	69.4	2.4	R63	T71B6	1.0
22	40	68.5	1.3	R50	T71B6	0.7
22	40	60.8	0.7	R40	T71B6	0.4
22	129	73.2	4.9	CB85	T63B2	1.7
22	130	72.7	2.6	CB70	T63B2	1.3
20	43	87.5	5.2	CB85	T71B6	2.2
20	69	87.7	5.2	CB85	T71A4	2.2
20	70	87.7	2.7	CB70	T71A4	1.6
20	70	67.6	2.2	R70	T71A4	0.9
20	70	68.8	1.7	R63	T71A4	0.8
20	70	66.4	1.0	R50	T71A4	0.6
20	44	88.4	2.6	CB70	T71B6	1.6
19.3	73	79.0	1.4	CB50	T71A4	0.7
18.3	48	97.8	1.1	CB50	T71B6	1.0
18.0	49	79.7	2.4	R70	T71B6	1.0
18.0	49	81.1	1.8	R63	T71B6	0.9
18.0	49	78.5	1.0	R50	T71B6	0.6
18.0	49	70.3	0.6	R40	T71B6	0.4
17.6	80	88.1	4.3	CB85	T71A4	1.5
17.6	80	73.1	1.9	R70	T71A4	0.8
17.6	80	74.5	1.5	R63	T71A4	0.8
17.6	80	69.0	0.8	R50	T71A4	0.5
17.3	51	101.1	4.9	CB85	T71B6	2.0
17.3	51	101.0	2.3	CB70	T71B6	1.5
17.0	166	84.4	2.3	CB70	T63B2	1.0
17.0	83	89.9	2.2	CB70	T71A4	1.2
16.9	52	104.6	1.1	CB50	T71B6	1.0
16.8	168	88.2	3.7	CB85	T63B2	1.4
16.6	170	83.3	1.0	CB50	T63B2	0.7
15.7	56	88.1	2.2	R70	T71B6	0.9
15.7	56	88.2	1.6	R63	T71B6	0.8
15.7	56	85.2	0.9	R50	T71B6	0.6
15.7	90	97.7	1.1	CB50	T71A4	0.7
14.9	59	116.8	4.3	CB85	T71B6	2.0
14.9	59	115.1	2.3	CB70	T71B6	1.5
14.5	97	101.9	1.1	CB50	T71A4	0.7
14.4	61	122.2	0.9	CB50	T71B6	1.0
14.2	199	97.7	0.9	CB50	T63B2	0.6
14.1	100	86.3	1.5	R70	T71A4	0.8
14.1	100	86.2	1.1	R63	T71A4	0.7
14.1	100	81.2	0.6	R50	T71A4	0.5
12.8	110	115.5	3.7	CB85	T71A4	1.5
12.8	110	115.4	2.0	CB70	T71A4	1.2
12.8	69	136.8	3.7	CB85	T71B6	2.0
12.6	70	136.7	1.9	CB70	T71B6	1.5
12.6	70	102.5	1.6	R70	T71B6	0.8
12.6	70	102.6	1.3	R63	T71B6	0.8
12.6	70	98.9	0.7	R50	T71B6	0.5
12.5	225	114.3	3.0	CB85	T63B2	1.4
12.4	228	110.0	1.9	CB70	T63B2	1.0
12.4	114	119.6	0.9	CB50	T71A4	0.7
12.1	73	122.8	0.9	CB50	T71B6	0.7
11.0	80	134.5	3.2	CB85	T71B6	1.5
11.0	80	108.4	1.5	R70	T71B6	0.8
11.0	80	110.7	1.1	R63	T71B6	0.7
11.0	80	101.9	0.6	R50	T71B6	0.5
10.9	129	135.4	3.2	CB85	T71A4	1.5
10.9	130	136.4	1.7	CB70	T71A4	1.2
10.8	262	97.7	0.6	CB50	T63B2	0.5
10.6	83	139.7	1.6	CB70	T71B6	1.2
10.1	140	139.8	3.6	40/85	T71A4	1.0
10.1	140	142.2	3.5	50/85	T71A4	1.5
10.1	140	142.2	3.5	63/85	T71A4	2.2
10.1	140	132.7	2.0	40/70	T71A4	1.0
10.1	140	135.2	2.0	63/70	T71A4	2.2
10.1	140	135.2	2.0	50/70	T71A4	1.5
10.1	140	135.2	1.8	40/63	T71A4	1.0
10.1	140	132.9	0.8	40/50	T71A4	1.0

1.7 - Getriebemotoren

n_2 min^{-1}	ir	T2 Nm	FS'		0.25 kW	Ptn kW
9.9	286	121.0	2.0	CB85	T63B2	1.1
9.8	90	144.0	0.8	CB50	T71B6	0.7
9.7	290	115.4	0.8	CB50	T63B2	0.6
9.6	295	117.3	1.2	CB70	T63B2	0.8
9.3	303	130.9	1.7	CB70	T63B2	0.8
9.1	97	155.4	0.7	CB50	T71B6	0.7
8.8	100	127.7	1.1	R70	T71B6	0.7
8.8	100	127.3	0.9	R63	T71B6	0.7
8.5	166	157.5	1.4	CB70	T71A4	1.0
8.4	168	165.1	2.3	CB85	T71A4	1.3
8.3	339	134.8	1.1	CB70	T63B2	0.8
8.3	170	152.4	0.7	CB50	T71A4	0.6
8.3	342	144.6	1.7	CB85	T63B2	1.1
8.0	110	176.0	2.7	CB85	T71B6	1.3
8.0	110	175.9	1.4	CB70	T71B6	1.0
7.7	114	182.1	0.6	CB50	T71B6	0.7
7.2	394	160.2	1.6	CB85	T63B2	1.0
7.2	394	153.5	1.0	CB70	T63B2	0.8
7.1	200	196.4	5.1	50/110	T71A4	1.4
7.1	200	199.8	5.0	63/110	T71A4	2.0
7.1	200	189.7	2.6	40/85	T71A4	0.9
7.1	200	192.9	2.6	50/85	T71A4	1.4
7.1	200	192.9	2.6	63/85	T71A4	2.0
7.1	200	183.1	1.6	40/70	T71A4	0.9
7.1	200	186.4	1.6	50/70	T71A4	1.4
7.1	200	189.8	1.5	63/70	T71A4	2.0
7.1	200	182.7	1.4	40/63	T71A4	0.9
7.1	200	179.7	0.6	40/50	T71A4	0.9
7.0	403	197.8	5.9	CB130	T63B2	2.7
6.8	129	206.5	2.3	CB85	T71B6	1.3
6.8	130	208.2	1.2	CB70	T71B6	1.0
6.3	225	209.5	2.1	CB85	T71A4	1.3
6.2	228	204.9	1.2	CB70	T71A4	1.0
6.1	460	179.1	1.5	CB85	T63B2	1.0
6.1	231	227.0	6.6	CB130	T71A4	2.7
6.1	464	176.7	0.9	CB70	T63B2	0.8
5.6	504	230.2	5.0	CB130	T63B2	2.4
5.4	162	259.5	5.9	CB130	T71B6	2.6
5.3	166	229.8	1.1	CB70	T71B6	0.8
5.2	168	237.2	2.0	CB85	T71B6	1.1
5.0	280	237.0	4.2	50/110	T71A4	1.4
5.0	280	241.5	4.1	63/110	T71A4	2.0
5.0	280	217.8	2.3	40/85	T71A4	0.9
5.0	280	222.8	2.2	63/85	T71A4	2.0
5.0	280	222.8	2.2	50/85	T71A4	1.4
5.0	280	217.7	1.3	40/70	T71A4	0.9
5.0	280	222.4	1.3	63/70	T71A4	2.0
5.0	280	222.4	1.3	50/70	T71A4	1.4
5.0	280	222.4	1.1	40/63	T71A4	0.9
4.9	286	212.9	1.3	CB85	T71A4	1.0
4.9	576	258.3	6.3	CB150	T63B2	3.2
4.9	288	277.6	5.6	CB130	T71A4	2.6
4.9	576	253.4	4.4	CB130	T63B2	2.3
4.8	295	215.0	0.8	CB70	T71A4	0.7
4.7	303	251.8	1.1	CB70	T71A4	0.7
4.6	618	225.5	0.7	CB70	T63B2	0.8
4.4	323	306.1	4.2	CB130	T71A4	2.5
4.4	202	317.6	5.1	CB130	T71B6	2.5
4.2	339	247.0	0.7	CB70	T71A4	0.7
4.1	342	254.5	1.1	CB85	T71A4	1.0
3.9	720	304.6	4.8	CB150	T63B2	3.0
3.9	720	292.3	3.3	CB130	T63B2	2.2
3.9	225	317.5	1.5	CB85	T71B6	1.1
3.9	228	309.4	0.9	CB70	T71B6	0.8
3.8	231	350.9	4.7	CB130	T71B6	2.4
3.6	394	280.4	1.1	CB85	T71A4	1.0
3.6	394	266.8	0.7	CB70	T71A4	0.7
3.5	400	345.9	5.2	63/130	T71A4	1.5
3.5	400	352.6	2.8	50/110	T71A4	1.0
3.5	400	352.6	2.8	63/110	T71A4	1.5
3.5	400	332.4	1.5	40/85	T71A4	0.6
3.5	400	346.3	1.4	50/85	T71A4	1.0
3.5	400	353.1	1.4	63/85	T71A4	1.5
3.5	400	318.7	1.0	40/70	T71A4	0.6
3.5	400	318.7	1.0	63/70	T71A4	1.5
3.5	400	332.0	1.0	50/70	T71A4	1.0
3.5	400	318.9	0.8	40/63	T71A4	0.6
3.5	403	381.9	5.8	CB150	T71A4	3.4
3.5	403	368.4	3.7	CB130	T71A4	2.4
3.1	286	326.2	0.9	CB85	T71B6	1.0

1.7 - Motoriduttori

n_2 min^{-1}	ir	T2 Nm	FS'		0.25 kW	Ptn kW
3.1	460	326.2	0.9	CB85	T71A4	1.0
3.1	288	444.8	6.1	CB150	T71B6	3.4
3.1	288	429.2	4.0	CB130	T71B6	2.3
2.9	303	387.7	0.7	CB70	T71B6	0.7
2.8	504	434.8	4.6	CB150	T71A4	3.0
2.8	504	426.3	3.2	CB130	T71A4	2.2
2.7	323	482.9	4.8	CB150	T71B6	3.3
2.7	323	465.4	3.1	CB130	T71B6	2.2
2.6	342	361.7	0.9	CB85	T71B6	0.9
2.5	576	487.3	3.9	CB150	T71A4	3.0
2.5	576	477.3	2.7	CB130	T71A4	2.2
2.4	600	518.0	5.9	CB180	T71A4	4.2
2.4	600	436.9	4.1	63/130	T71A4	1.7
2.4	600	447.2	2.2	63/110	T71A4	1.7
2.4	600	447.2	2.2	50/110	T71A4	1.2
2.4	600	405.8	1.2	40/85	T71A4	0.7
2.4	600	426.6	1.2	50/85	T71A4	1.2
2.4	600	426.6	1.2	63/85	T71A4	1.7
2.4	600	397.0	0.8	40/70	T71A4	0.7
2.4	600	415.8	0.8	50/70	T71A4	1.2
2.4	600	415.8	0.8	63/70	T71A4	1.7
2.4	600	395.6	0.6	40/63	T71A4	0.7
2.2	394	417.1	0.8	CB85	T71B6	0.9
2.2	403	591.3	4.1	CB150	T71B6	3.2
2.2	403	569.6	2.6	CB130	T71B6	2.2
2.1	420	625.3	6.4	CB180	T71B6	4.5
2.0	434	599.9	5.7	CB180	T71B6	4.2
2.0	720	560.4	3.0	CB150	T71A4	2.7
2.0	720	536.1	2.1	CB130	T71A4	2.0
1.9	460	486.6	0.7	CB85	T71B6	0.9
1.9	750	584.3	4.6	CB180	T71A4	3.8
1.8	504	668.2	3.2	CB150	T71B6	2.9
1.8	504	655.2	2.2	CB130	T71B6	2.0
1.7	525	710.5	5.0	CB180	T71B6	4.1
1.5	576	733.1	2.8	CB150	T71B6	2.8
1.5	576	733.2	1.9	CB130	T71B6	2.0
1.5	600	779.5	4.2	CB180	T71B6	3.9
1.4	980	696.6	2.6	70/130	T71A4	1.1
1.4	980	696.6	2.6	63/130	T71A4	1.0
1.4	980	679.3	1.5	50/110	T71A4	0.7
1.4	980	696.4	1.4	70/110	T71A4	1.1
1.4	980	696.4	1.4	63/110	T71A4	1.0
1.4	980	612.7	0.8	40/85	T71A4	0.4
1.4	980	679.3	0.7	50/85	T71A4	0.7
1.4	980	694.4	0.7	63/85	T71A4	1.0
1.4	980	694.4	0.7	70/85	T71A4	1.1
1.2	720	861.5	2.1	CB150	T71B6	2.6
1.2	720	821.5	1.5	CB130	T71B6	1.8
1.2	750	959.0	5.1	CB215	T71B6	4.7
1.2	750	897.7	3.3	CB180	T71B6	3.6
1.0	1372	810.8	2.2	70/130	T71A4	1.1
1.0	1372	810.8	2.2	63/130	T71A4	1.0
1.0	1372	788.6	1.3	50/110	T71A4	0.7
1.0	1372	811.7	1.2	70/110	T71A4	1.1
1.0	1372	811.7	1.2	63/110	T71A4	1.0
1.0	1372	672.0	0.7	40/85	T71A4	0.4
1.0	1372	739.6	0.7	50/85	T71A4	0.7
1.0	1372	766.9	0.7	63/85	T71A4	1.0
1.0	1372	766.9	0.7	70/85	T71A4	1.1
0.72	1960	1061	1.7	63/130	T71A4	1.0
0.72	1960	1061	1.7	70/130	T71A4	1.1
0.72	1960	1059	0.9	70/110	T71A4	1.1
0.72	1960	1059	0.9	50/110	T71A4	0.7
0.72	1960	1059	0.9	63/110	T71A4	1.0
0.50	2800	1289	1.4	70/130	T71A4	0.9
0.50	2800	1335	1.3	63/130	T71A4	0.8
0.50	2800	1289	0.8	50/110	T71A4	0.6
0.50	2800	1337	0.7	70/110	T71A4	0.9
0.50	2800	1337	0.7	63/110	T71A4	0.8
0.35	4000	1636	1.1	63/130	T71A4	0.7
0.35	4000	1636	1.1	70/130	T71A4	0.8
0.35	4000	1572	0.6	50/110	T71A4	0.5
0.35	4000	1634	0.6	70/110	T71A4	0.8
0.35	4000	1634	0.6	63/110	T71A4	0.7
0.25	5600	2202	0.8	63/130	T71A4	0.7
0.25	5600	2202	0.8	70/130	T71A4	0.8
0.20	7000	2388	0.7	63/130	T71A4	0.7
0.20	7000	2388	0.7	70/130	T71A4	0.8
0.18	8000	2649	0.6	63/130	T71A4	0.7
0.18	8000	2649	0.6	70/130	T71A4	0.8

1.7 - *Gearmotors*

n_2 min^{-1}	ir	T2 Nm	FS'		0.37 kW	Ptn kW
572	5	5.3	5.1	R40	T71A2	1.1
560	5	5.4	5.0	R40	T63C2	1.1
409	7	7.3	3.7	R40	T71A2	1.0
400	7	7.4	3.6	R40	T63C2	1.0
400	7	7.3	1.5	R28	T63C2	0.6
286	10	10.4	5.3	R50	T71A2	1.4
286	10	10.3	3.0	R40	T71A2	0.9
280	10	10.6	5.2	R50	T63C2	1.4
280	10	10.5	3.0	R40	T63C2	0.9
280	10	10.2	1.3	R28	T63C2	0.5
274	5	11.0	3.4	R40	T71B4	1.1
268	5	11.2	3.3	R40	T63D4	1.1
196	7	15.2	4.5	R50	T71B4	1.5
196	7	15.0	2.5	R40	T71B4	1.0
191	7	15.5	4.4	R50	T63D4	1.5
191	7	15.3	2.4	R40	T63D4	1.0
191	7	15.0	1.0	R28	T63D4	0.6
191	15	15.2	6.4	R63	T71A2	1.7
191	15	15.2	3.8	R50	T71A2	1.2
191	15	14.8	2.2	R40	T71A2	0.7
187	15	15.5	3.7	R50	T63C2	1.2
187	15	15.1	2.1	R40	T63C2	0.7
187	15	14.8	0.9	R28	T63C2	0.5
143	20	19.8	5.3	R63	T71A2	1.5
143	20	19.5	2.9	R50	T71A2	1.0
143	20	18.8	1.5	R40	T71A2	0.6
140	20	19.9	2.9	R50	T63C2	1.0
140	20	19.2	1.5	R40	T63C2	0.6
140	20	18.9	0.6	R28	T63C2	0.4
137	10	21.4	5.9	R63	T71B4	2.0
137	10	21.2	3.5	R50	T71B4	1.4
137	10	20.9	2.0	R40	T71B4	0.9
134	7	22.1	6.2	R63	T80A6	2.2
134	7	21.8	3.7	R50	T80A6	1.4
134	10	21.6	3.4	R50	T63D4	1.4
134	10	21.3	2.0	R40	T63D4	0.9
134	10	20.8	0.8	R28	T63D4	0.5
130	7	22.8	6.0	R63	T71C6	2.2
130	7	22.6	3.6	R50	T71C6	1.4
130	7	22.0	2.0	R40	T71C6	0.9
102	28	26.0	4.0	R63	T71A2	1.2
102	28	25.6	2.4	R50	T71A2	0.8
102	28	24.6	1.4	R40	T71A2	0.5
100	28	26.2	2.4	R50	T63C2	0.8
100	28	25.1	1.4	R40	T63C2	0.5
100	28	24.3	0.6	R28	T63C2	0.3
94	10	30.8	5.5	R70	T80A6	2.1
94	10	30.4	4.9	R63	T80A6	1.8
94	10	30.4	2.8	R50	T80A6	1.3
91	15	31.0	4.2	R63	T71B4	1.7
91	15	30.9	2.5	R50	T71B4	1.2
91	15	29.8	1.4	R40	T71B4	0.7
91	10	31.4	4.7	R63	T71C6	1.8
91	10	31.4	2.7	R50	T71C6	1.3
91	10	30.7	1.6	R40	T71C6	0.8
89	15	31.6	2.4	R50	T63D4	1.2
89	15	30.5	1.4	R40	T63D4	0.7
89	15	29.7	0.6	R28	T63D4	0.5
72	40	35.1	3.6	R70	T71A2	1.2
72	40	35.1	3.2	R63	T71A2	1.1
72	40	34.6	1.9	R50	T71A2	0.7
72	40	32.1	1.0	R40	T71A2	0.4
70	40	35.3	1.8	R50	T63C2	0.7
70	40	32.8	1.0	R40	T63C2	0.4
69	20	39.7	3.4	R63	T71B4	1.5
69	20	39.2	1.9	R50	T71B4	1.0
69	20	37.6	1.0	R40	T71B4	0.6
67	20	40.1	1.8	R50	T63D4	1.0
67	20	38.5	1.0	R40	T63D4	0.6
65	44	42.4	4.0	CB70	T71A2	1.8
64	44	43.3	3.9	CB70	T63C2	1.8
64	44	41.7	1.2	CB40	T63C2	0.7
63	15	44.0	3.9	R70	T80A6	1.7
63	15	44.0	3.5	R63	T80A6	1.6
63	15	44.6	2.0	R50	T80A6	1.2
61	15	45.4	3.4	R63	T71C6	1.6
61	15	46.0	1.9	R50	T71C6	1.2
61	15	43.7	1.1	R40	T71C6	0.7
60	48	46.8	1.9	CB50	T71A2	1.2
58	49	41.2	3.2	R70	T71A2	1.1
58	49	41.8	2.3	R63	T71A2	1.0
58	49	40.6	1.4	R50	T71A2	0.7
58	49	37.5	0.8	R40	T71A2	0.4
58	48	47.9	1.9	CB50	T63C2	1.2

1.7 - Getriebemotoren

n_2 min^{-1}	ir	T2 Nm	FS'		0.37 kW	Ptn kW
57	49	41.4	1.4	R50	T63C2	0.7
57	49	38.3	0.8	R40	T63C2	0.4
56	51	49.1	3.5	CB70	T71A2	1.8
56	50	47.3	1.0	CB40	T63C2	0.7
55	52	50.8	1.9	CB50	T71A2	1.2
55	51	50.9	6.5	CB85	T63C2	2.4
55	51	50.2	3.4	CB70	T63C2	1.8
54	52	51.8	1.8	CB50	T63C2	1.2
51	56	46.3	2.8	R70	T71A2	1.0
51	56	46.4	2.2	R63	T71A2	0.9
51	56	45.0	1.2	R50	T71A2	0.6
51	56	41.4	0.7	R40	T71A2	0.4
50	56	45.9	1.2	R50	T63C2	0.6
50	56	42.5	0.7	R40	T63C2	0.4
49	28	51.3	2.6	R63	T71B4	1.2
49	28	50.5	1.6	R50	T71B4	0.8
49	28	48.4	0.9	R40	T71B4	0.5
48	59	57.6	6.1	CB85	T71A2	2.4
48	59	56.9	3.2	CB70	T71A2	1.8
48	58	54.8	0.9	CB40	T63C2	0.7
48	28	51.7	1.5	R50	T63D4	0.8
48	28	49.4	0.9	R40	T63D4	0.5
47	59	58.8	6.0	CB85	T63C2	2.4
47	59	58.1	3.1	CB70	T63C2	1.8
47	20	56.4	3.1	R70	T80A6	1.5
47	20	56.4	2.8	R63	T80A6	1.4
47	20	55.6	1.5	R50	T80A6	0.9
47	61	59.6	1.6	CB50	T71A2	1.2
46	61	60.8	1.5	CB50	T63C2	1.2
46	20	58.2	2.7	R63	T71C6	1.4
46	20	57.4	1.5	R50	T71C6	0.9
46	20	54.3	0.8	R40	T71C6	0.6
41	69	66.5	5.7	CB85	T71A2	2.4
41	68	63.6	0.9	CB40	T63C2	0.7
41	70	66.6	2.9	CB70	T71A2	1.8
41	70	53.6	2.2	R70	T71A2	0.9
41	70	54.5	1.7	R63	T71A2	0.8
41	70	52.7	1.0	R50	T71A2	0.6
41	69	67.9	5.6	CB85	T63C2	2.4
40	70	68.0	2.8	CB70	T63C2	1.8
40	70	53.9	1.0	R50	T63C2	0.6
39	73	60.5	1.5	CB50	T71A2	0.8
38	73	61.7	1.5	CB50	T63C2	0.8
36	80	68.2	4.7	CB85	T71A2	1.7
36	80	59.3	1.9	R70	T71A2	0.8
36	80	60.3	1.5	R63	T71A2	0.8
36	80	56.3	0.8	R50	T71A2	0.5
35	80	69.7	4.6	CB85	T63C2	1.7
35	80	57.6	0.8	R50	T63C2	0.5
34	83	69.7	2.4	CB70	T71A2	1.3
34	40	69.1	2.3	R70	T71B4	1.2
34	40	69.1	2.1	R63	T71B4	1.1
34	40	68.1	1.2	R50	T71B4	0.7
34	40	61.9	0.6	R40	T71B4	0.4
34	83	71.2	2.4	CB70	T63C2	1.3
34	83	67.0	0.7	CB40	T63C2	0.5
34	28	71.6	2.4	R70	T80A6	1.2
34	28	71.6	2.2	R63	T80A6	1.1
34	28	70.5	1.3	R50	T80A6	0.7
34	40	69.5	1.2	R50	T63D4	0.7
34	40	63.2	0.6	R40	T63D4	0.4
33	28	73.9	2.1	R63	T71C6	1.1
33	28	72.9	1.3	R50	T71C6	0.7
33	28	69.5	0.7	R40	T71C6	0.5
32	43	85.4	4.7	CB85	T71B4	2.2
32	90	74.5	1.2	CB50	T71A2	0.8
31	43	87.3	4.6	CB85	T63D4	2.2
31	44	86.2	2.4	CB70	T71B4	1.6
31	90	76.2	1.2	CB50	T63C2	0.8
30	44	88.2	2.3	CB70	T63D4	1.6
30	44	84.6	0.7	CB40	T63D4	0.7
29	97	79.1	1.2	CB50	T71A2	0.8
29	97	80.8	1.2	CB50	T63C2	0.8
29	100	71.6	1.4	R70	T71A2	0.8
29	100	70.5	1.1	R63	T71A2	0.7
29	100	66.7	0.6	R50	T71A2	0.5
29	48	95.4	1.1	CB50	T71B4	1.1
28	100	68.2	0.6	R50	T63C2	0.5
28	49	80.9	2.1	R70	T71B4	1.1
28	49	80.9	1.5	R63	T71B4	1.0

1.7 - Motoriduttori

n_2 min^{-1}	ir	T2 Nm	FS'		0.37 kW	Ptn kW
28	49	79.5	0.9	R50	T71B4	0.7
28	48	97.6	1.1	CB50	T63D4	1.1
27	49	81.5	0.9	R50	T63D4	0.7
27	51	101.3	4.0	CB85	T71B4	2.2
27	51	99.9	2.1	CB70	T71B4	1.6
27	50	96.2	0.6	CB40	T63D4	0.7
26	52	101.9	1.1	CB50	T71B4	1.1
26	51	103.5	3.9	CB85	T63D4	2.2
26	51	102.2	2.0	CB70	T63D4	1.6
26	110	92.4	3.7	CB85	T71A2	1.7
26	110	91.1	2.0	CB70	T71A2	1.3
26	52	104.3	1.0	CB50	T63D4	1.1
26	109	86.7	0.6	CB40	T63C2	0.5
25	110	94.4	3.6	CB85	T63C2	1.7
25	110	93.0	1.9	CB70	T63C2	1.3
25	114	93.0	1.0	CB50	T71A2	0.8
25	114	94.9	1.0	CB50	T63C2	0.8
24	56	89.6	1.9	R70	T71B4	1.0
24	56	89.5	1.4	R63	T71B4	0.9
24	56	86.5	0.8	R50	T71B4	0.6
24	56	88.6	0.8	R50	T63D4	0.6
24	40	99.3	3.6	R85	T80A6	1.5
24	40	96.3	1.9	R70	T80A6	1.1
24	40	96.3	1.7	R63	T80A6	1.0
24	40	94.8	1.0	R50	T80A6	0.7
23	59	114.2	4.0	CB85	T71B4	2.2
23	59	112.6	2.1	CB70	T71B4	1.6
23	40	99.5	1.9	R70	T71C6	1.1
23	40	99.4	1.7	R63	T71C6	1.0
23	40	97.8	0.9	R50	T71C6	0.7
23	59	116.7	3.9	CB85	T63D4	2.2
23	59	115.1	2.0	CB70	T63D4	1.6
22	61	119.6	0.9	CB50	T71B4	1.1
22	129	106.8	3.4	CB85	T71A2	1.7
22	130	106.0	1.8	CB70	T71A2	1.3
22	61	122.2	0.9	CB50	T63D4	1.1
22	43	121.2	3.7	CB85	T80A6	2.2
22	129	109.1	3.3	CB85	T63C2	1.7
22	130	108.2	1.8	CB70	T63C2	1.3
21	44	122.5	1.9	CB70	T80A6	1.6
21	43	125.3	3.6	CB85	T71C6	2.2
21	44	126.4	1.9	CB70	T71C6	1.6
19.9	69	133.5	3.4	CB85	T71B4	2.2
19.6	70	133.6	1.8	CB70	T71B4	1.6
19.6	70	102.9	1.4	R70	T71B4	0.9
19.6	70	104.8	1.1	R63	T71B4	0.8
19.6	70	101.2	0.6	R50	T71B4	0.6
19.4	69	136.4	3.3	CB85	T63D4	2.2
19.2	49	114.2	2.9	R85	T80A6	1.3
19.2	49	110.5	1.7	R70	T80A6	1.0
19.2	49	112.3	1.3	R63	T80A6	0.9
19.2	49	108.7	0.8	R50	T80A6	0.6
19.1	70	136.6	1.7	CB70	T63D4	1.6
19.1	70	103.4	0.6	R50	T63D4	0.6
19.0	48	139.7	0.8	CB50	T71C6	1.0
18.8	73	120.4	0.9	CB50	T71B4	0.7
18.6	49	114.1	1.7	R70	T71C6	1.0
18.6	49	116.0	1.2	R63	T71C6	0.9
18.6	49	112.4	0.7	R50	T71C6	0.6
18.4	51	139.9	3.6	CB85	T80A6	2.0
18.4	51	139.9	1.7	CB70	T80A6	1.5
18.4	73	123.3	0.9	CB50	T63D4	0.7
17.8	51	144.6	3.5	CB85	T71C6	2.0
17.8	51	144.5	1.6	CB70	T71C6	1.5
17.5	52	149.6	0.7	CB50	T71C6	1.0
17.2	166	123.1	1.5	CB70	T71A2	1.0
17.1	80	134.1	2.8	CB85	T71B4	1.5
17.1	80	111.5	1.3	R70	T71B4	0.8
17.1	80	113.4	1.0	R63	T71B4	0.8
17.0	168	128.7	2.6	CB85	T71A2	1.4
16.9	166	125.8	1.5	CB70	T63C2	1.0
16.8	170	121.9	0.7	CB50	T71A2	0.7
16.8	56	130.5	2.5	R85	T80A6	1.3
16.8	56	122.1	1.6	R70	T80A6	0.9
16.8	56	121.9	1.2	R63	T80A6	0.8
16.8	56	117.8	0.7	R50	T80A6	0.6
16.8	80	137.1	2.8	CB85	T63D4	1.5
16.7	168	131.5	2.5	CB85	T63C2	1.4
16.5	83	136.9	1.5	CB70	T71B4	1.2
16.5	170	124.3	0.7	CB50	T63C2	0.7

1.7 - *Gearmotors*

n_2 min^{-1}	ir	T2 Nm	FS'		0.37 kW	Ptn kW
16.3	56	126.2	1.5	R70	T71C6	0.9
16.3	56	126.2	1.1	R63	T71C6	0.8
16.3	56	121.8	0.6	R50	T71C6	0.6
16.1	83	140.2	1.4	CB70	T63D4	1.2
15.9	59	164.1	6.0	CB110	T80A6	3.4
15.9	59	161.9	3.1	CB85	T80A6	2.0
15.9	59	159.8	1.6	CB70	T80A6	1.5
15.4	59	167.3	3.0	CB85	T71C6	2.0
15.4	59	164.9	1.6	CB70	T71C6	1.5
15.2	90	148.8	0.7	CB50	T71B4	0.7
14.9	61	175.4	0.6	CB50	T71C6	1.0
14.9	90	151.6	0.7	CB50	T63D4	0.7
14.4	199	142.7	0.6	CB50	T71A2	0.6
14.1	97	155.3	0.7	CB50	T71B4	0.7
13.8	97	158.4	0.7	CB50	T63D4	0.7
13.7	100	131.6	1.0	R70	T71B4	0.8
13.7	100	131.8	0.8	R63	T71B4	0.7
13.6	69	192.0	5.2	CB110	T80A6	3.4
13.6	69	189.4	2.6	CB85	T80A6	2.0
13.4	70	149.9	2.0	R85	T80A6	1.2
13.4	70	189.3	1.4	CB70	T80A6	1.5
13.4	70	142.1	1.2	R70	T80A6	0.8
13.4	70	142.2	0.9	R63	T80A6	0.8
13.2	69	195.6	2.6	CB85	T71C6	2.0
13.0	70	195.8	1.3	CB70	T71C6	1.5
13.0	70	146.8	1.2	R70	T71C6	0.8
13.0	70	146.9	0.9	R63	T71C6	0.8
12.7	225	166.7	2.1	CB85	T71A2	1.4
12.5	228	160.7	1.3	CB70	T71A2	1.0
12.5	73	175.4	0.6	CB50	T71C6	0.7
12.5	110	176.0	2.4	CB85	T71B4	1.5
12.5	110	176.1	1.3	CB70	T71B4	1.2
12.4	225	170.5	2.0	CB85	T63C2	1.4
12.3	228	164.1	1.3	CB70	T63C2	1.0
12.2	110	179.8	2.4	CB85	T63D4	1.5
12.2	110	179.9	1.3	CB70	T63D4	1.2
12.0	114	182.5	0.6	CB50	T71B4	0.7
11.8	80	198.5	4.5	CB110	T80A6	2.9
11.8	80	186.5	2.3	CB85	T80A6	1.5
11.8	80	162.4	1.7	R85	T80A6	1.1
11.8	80	150.3	1.1	R70	T80A6	0.8
11.8	80	153.4	0.8	R63	T80A6	0.7
11.4	80	192.6	2.2	CB85	T71C6	1.5
11.4	80	155.4	1.0	R70	T71C6	0.8
11.4	80	158.2	0.8	R63	T71C6	0.7
11.3	83	193.5	1.2	CB70	T80A6	1.2
11.0	83	199.9	1.1	CB70	T71C6	1.2
10.6	129	206.3	2.1	CB85	T71B4	1.5
10.5	130	207.8	1.1	CB70	T71B4	1.2
10.4	129	210.9	2.0	CB85	T63D4	1.5
10.3	130	212.5	1.1	CB70	T63D4	1.2
10.0	286	176.6	1.4	CB85	T71A2	1.1
9.9	288	217.1	6.2	CB130	T71A2	2.9
9.8	140	216.5	4.6	50/110	T71B4	1.5
9.8	140	216.5	4.6	63/110	T71B4	2.2
9.8	140	212.9	2.3	40/85	T71B4	1.0
9.8	140	216.6	2.3	50/85	T71B4	1.5
9.8	140	216.6	2.3	63/85	T71B4	2.2
9.8	286	180.5	1.3	CB85	T63C2	1.1
9.8	140	202.1	1.3	40/70	T71B4	1.0
9.8	140	205.9	1.3	50/70	T71B4	1.5
9.8	140	205.9	1.3	63/70	T71B4	2.2
9.8	140	205.7	1.2	40/63	T71B4	1.0
9.7	288	221.8	6.0	CB130	T63C2	2.9
9.7	295	171.3	0.8	CB70	T71A2	0.8
9.6	140	221.6	4.5	50/110	T63D4	1.5
9.6	140	217.9	2.3	40/85	T63D4	1.0
9.6	140	221.6	2.3	50/85	T63D4	1.5
9.6	140	206.8	1.3	40/70	T63D4	1.0
9.6	140	210.3	1.3	50/70	T63D4	1.5
9.6	140	210.7	1.1	40/63	T63D4	1.0
9.6	140	203.2	1.0	28/70	T63D4	0.6
9.6	140	207.0	1.0	28/63	T63D4	0.6
9.5	144	260.1	6.3	CB130	T71B4	3.7
9.5	295	175.3	0.8	CB70	T63C2	0.8
9.4	303	191.0	1.2	CB70	T71A2	0.8
9.4	100	188.1	1.3	R85	T80A6	1.0
9.4	100	176.4	0.8	R70	T80A6	0.7
9.4	100	176.3	0.6	R63	T80A6	0.7
9.3	144	265.7	6.1	CB130	T63D4	3.7

1.7 - Getriebemotoren

n_2 min^{-1}	ir	T2 Nm	FS'		0.37 kW	Ptn kW
9.2	303	195.1	1.1	CB70	T63C2	0.8
9.1	100	182.5	0.8	R70	T71C6	0.7
9.1	100	182.6	0.6	R63	T71C6	0.7
8.9	323	235.5	4.7	CB130	T71A2	2.7
8.7	323	240.4	4.6	CB130	T63C2	2.7
8.6	110	260.4	3.8	CB110	T80A6	2.4
8.6	110	244.0	2.0	CB85	T80A6	1.3
8.6	110	244.1	1.0	CB70	T80A6	1.0
8.5	162	258.9	5.4	CB130	T71B4	3.0
8.4	339	196.6	0.7	CB70	T71A2	0.8
8.4	342	211.6	1.1	CB85	T71A2	1.1
8.3	162	264.9	5.2	CB130	T63D4	3.0
8.3	110	251.9	1.9	CB85	T71C6	1.3
8.3	110	252.0	1.0	CB70	T71C6	1.0
8.3	339	201.1	0.7	CB70	T63C2	0.8
8.3	166	239.9	0.9	CB70	T71B4	1.0
8.2	342	215.6	1.1	CB85	T63C2	1.1
8.2	115	298.4	5.7	CB130	T80A6	3.4
8.2	168	251.7	1.5	CB85	T71B4	1.3
8.1	166	244.8	0.9	CB70	T63D4	1.0
8.0	168	256.6	1.5	CB85	T63D4	1.3
7.9	115	308.3	5.5	CB130	T71C6	3.4
7.3	129	305.3	3.3	CB110	T80A6	2.4
7.3	129	286.0	1.7	CB85	T80A6	1.3
7.3	394	233.5	1.1	CB85	T71A2	1.0
7.3	394	223.5	0.7	CB70	T71A2	0.8
7.2	130	288.3	0.9	CB70	T80A6	1.0
7.1	394	238.3	1.1	CB85	T63C2	1.0
7.1	394	229.0	0.7	CB70	T63C2	0.8
7.1	403	298.6	6.4	CB150	T71A2	3.7
7.1	403	288.6	4.0	CB130	T71A2	2.7
7.1	129	295.5	1.6	CB85	T71C6	1.3
7.0	130	297.4	0.9	CB70	T71C6	1.0
7.0	403	305.1	6.2	CB150	T63C2	3.7
7.0	403	294.9	3.9	CB130	T63C2	2.7
6.9	200	304.4	5.9	63/130	T71B4	2.0
6.9	200	299.1	3.3	50/110	T71B4	1.4
6.9	200	304.3	3.3	63/110	T71B4	2.0
6.9	200	289.1	1.7	40/85	T71B4	0.9
6.9	200	294.1	1.7	50/85	T71B4	1.4
6.9	200	294.1	1.7	63/85	T71B4	2.0
6.9	200	278.7	1.0	40/70	T71B4	0.9
6.9	200	283.9	1.0	50/70	T71B4	1.4
6.9	200	289.2	1.0	63/70	T71B4	2.0
6.9	200	278.6	0.9	40/63	T71B4	0.9
6.8	202	318.0	4.6	CB130	T71B4	2.9
6.7	200	305.8	3.3	50/110	T63D4	1.4
6.7	200	295.5	1.7	40/85	T63D4	0.9
6.7	200	300.8	1.7	50/85	T63D4	1.4
6.7	200	284.6	1.0	40/70	T63D4	0.9
6.7	200	290.0	1.0	50/70	T63D4	1.4
6.7	200	284.6	0.9	40/63	T63D4	0.9
6.7	200	279.3	0.8	28/70	T63D4	0.5
6.7	200	279.3	0.8	28/63	T63D4	0.5
6.6	202	325.1	4.5	CB130	T63D4	2.9
6.5	144	367.9	4.9	CB130	T80A6	3.3
6.3	144	380.2	4.7	CB130	T71C6	3.3
6.2	460	261.6	1.0	CB85	T71A2	1.0
6.2	464	258.0	0.6	CB70	T71A2	0.8
6.1	225	319.2	1.4	CB85	T71B4	1.3
6.1	460	266.6	1.0	CB85	T63C2	1.0
6.0	464	263.8	0.6	CB70	T63C2	0.8
6.0	228	311.4	0.8	CB70	T71B4	1.0
6.0	225	326.4	1.3	CB85	T63D4	1.3
5.9	231	357.5	6.6	CB150	T71B4	3.7
5.9	231	345.7	4.3	CB130	T71B4	2.7
5.9	228	319.0	0.8	CB70	T63D4	1.0
5.8	162	371.7	6.6	CB150	T80A6	3.8
5.8	231	365.5	6.4	CB150	T63D4	3.7
5.8	162	359.5	4.3	CB130	T80A6	2.6
5.8	231	353.4	4.2	CB130	T63D4	2.7
5.7	504	342.7	5.0	CB150	T71A2	3.3
5.7	504	336.7	3.4	CB130	T71A2	2.4
5.7	166	317.9	0.8	CB70	T80A6	0.8
5.6	162	383.5	6.4	CB150	T71C6	3.8
5.6	162	371.0	4.1	CB130	T71C6	2.6
5.6	168	353.3	2.8	CB110	T80A6	2.0
5.6	168	328.3	1.5	CB85	T80A6	1.1
5.6	504	349.5	4.9	CB150	T63C2	3.3
5.6	504	343.1	3.4	CB130	T63C2	2.4

1.7 - Motoriduttori

n_2 min^{-1}	ir	T2 Nm	FS'		0.37 kW	Ptn kW
5.5	166	329.2	0.8	CB70	T71C6	0.8
5.4	168	338.9	1.4	CB85	T71C6	1.1
5.0	576	376.7	4.3	CB150	T71A2	3.2
5.0	576	369.7	3.0	CB130	T71A2	2.3
4.9	280	368.6	4.3	63/130	T71B4	2.0
4.9	280	361.3	2.8	50/110	T71B4	1.4
4.9	280	368.5	2.7	63/110	T71B4	2.0
4.9	280	332.1	1.5	40/85	T71B4	0.9
4.9	280	339.4	1.5	50/85	T71B4	1.4
4.9	280	339.4	1.5	63/85	T71B4	2.0
4.9	280	332.2	0.9	40/70	T71B4	0.9
4.9	280	339.6	0.9	50/70	T71B4	1.4
4.9	280	339.6	0.9	63/70	T71B4	2.0
4.9	280	340.1	0.7	40/63	T71B4	0.9
4.9	576	385.2	4.2	CB150	T63C2	3.2
4.9	576	378.2	2.9	CB130	T63C2	2.3
4.8	280	368.9	2.7	50/110	T63D4	1.4
4.8	280	339.4	1.5	40/85	T63D4	0.9
4.8	280	346.4	1.4	50/85	T63D4	1.4
4.8	286	324.9	0.9	CB85	T71B4	1.0
4.8	280	339.6	0.9	40/70	T63D4	0.9
4.8	280	347.2	0.8	50/70	T63D4	1.4
4.8	280	332.0	0.8	28/70	T63D4	0.5
4.8	280	338.8	0.7	28/63	T63D4	0.5
4.8	280	346.4	0.7	40/63	T63D4	0.9
4.8	600	400.0	6.6	CB180	T71A2	4.4
4.8	288	438.0	5.6	CB150	T71B4	3.6
4.8	288	423.2	3.7	CB130	T71B4	2.6
4.7	286	331.1	0.8	CB85	T63D4	1.0
4.7	600	408.5	6.4	CB180	T63C2	4.4
4.7	202	455.8	5.6	CB150	T80A6	3.7
4.7	288	448.4	5.5	CB150	T63D4	3.6
4.7	202	440.8	3.6	CB130	T80A6	2.5
4.7	288	433.0	3.6	CB130	T63D4	2.6
4.5	303	382.5	0.7	CB70	T71B4	0.7
4.5	202	471.2	5.4	CB150	T71C6	3.7
4.5	202	455.3	3.5	CB130	T71C6	2.5
4.4	303	391.3	0.7	CB70	T63D4	0.7
4.2	323	483.3	4.4	CB150	T71B4	3.5
4.2	323	466.6	2.8	CB130	T71B4	2.5
4.2	225	473.3	2.1	CB110	T80A6	2.0
4.2	225	439.6	1.1	CB85	T80A6	1.1
4.2	323	494.0	4.3	CB150	T63D4	3.5
4.2	323	476.8	2.7	CB130	T63D4	2.5
4.1	228	429.1	0.6	CB70	T80A6	0.8
4.1	231	503.5	5.1	CB150	T80A6	3.5
4.1	231	486.1	3.4	CB130	T80A6	2.4
4.0	225	455.4	1.1	CB85	T71C6	1.1
4.0	342	387.9	0.7	CB85	T71B4	1.0
4.0	228	442.1	0.6	CB70	T71C6	0.8
4.0	720	445.2	3.3	CB150	T71A2	3.0
4.0	720	427.5	2.3	CB130	T71A2	2.2
3.9	231	520.2	5.0	CB150	T71C6	3.5
3.9	231	502.2	3.3	CB130	T71C6	2.4
3.9	342	396.8	0.7	CB85	T63D4	1.0
3.9	720	454.2	3.2	CB150	T63C2	3.0
3.9	720	435.8	2.2	CB130	T63C2	2.2
3.8	750	463.6	5.0	CB180	T71A2	4.1
3.7	750	473.8	4.9	CB180	T63C2	4.1
3.5	261	577.1	6.5	CB180	T71C6	4.7
3.5	394	426.1	0.7	CB85	T71B4	1.0
3.4	400	526.9	3.4	63/130	T71B4	1.5
3.4	400	537.0	1.9	63/110	T71B4	1.5
3.4	400	537.0	1.9	50/110	T71B4	1.0
3.4	400	506.8	1.0	40/85	T71B4	0.6
3.4	400	527.1	0.9	50/85	T71B4	1.0
3.4	400	537.8	0.9	63/85	T71B4	1.5
3.4	400	485.2	0.7	40/70	T71B4	0.6
3.4	400	485.2	0.7	63/70	T71B4	1.5
3.4	400	506.0	0.6	50/70	T71B4	1.0
3.4	403	582.0	3.8	CB150	T71B4	3.4
3.4	403	561.0	2.4	CB130	T71B4	2.4
3.4	394	436.0	0.7	CB85	T63D4	1.0
3.4	400	548.1	1.8	50/110	T63D4	1.0
3.4	400	516.8	1.0	40/85	T63D4	0.6
3.4	400	537.8	0.9	50/85	T63D4	1.0
3.4	400	495.4	0.6	40/70	T63D4	0.6
3.4	400	517.0	0.6	50/70	T63D4	1.0
3.3	403	594.3	3.7	CB150	T63D4	3.4
3.3	403	573.1	2.4	CB130	T63D4	2.4

1.7 - *Gearmotors*

n_2 min^{-1}	ir	T2 Nm	FS'		0.37 kW	Ptn kW
3.3	286	515.3	1.2	CB110	T80A6	1.8
3.3	286	451.7	0.7	CB85	T80A6	1.0
3.3	420	617.7	5.9	CB180	T71B4	4.7
3.3	288	617.8	4.4	CB150	T80A6	3.4
3.3	288	596.4	2.9	CB130	T80A6	2.3
3.2	420	631.3	5.8	CB180	T63D4	4.7
3.2	286	466.7	0.7	CB85	T71C6	1.0
3.2	434	592.6	5.3	CB180	T71B4	4.3
3.2	288	637.4	4.3	CB150	T71C6	3.4
3.2	288	614.9	2.8	CB130	T71C6	2.3
3.1	304	640.4	6.0	CB180	T80A6	4.6
3.1	434	606.2	5.2	CB180	T63D4	4.3
3.0	304	661.7	5.8	CB180	T71C6	4.6
3.0	460	497.7	0.6	CB85	T71B4	1.0
2.9	323	668.0	3.5	CB150	T80A6	3.3
2.9	323	643.4	2.2	CB130	T80A6	2.2
2.8	323	688.9	3.4	CB150	T71C6	3.3
2.8	323	664.5	2.1	CB130	T71C6	2.2
2.8	342	539.2	1.2	CB110	T80A6	1.6
2.8	342	502.0	0.7	CB85	T80A6	0.9
2.7	504	662.6	3.0	CB150	T71B4	3.0
2.7	504	649.8	2.1	CB130	T71B4	2.2
2.7	504	677.3	2.9	CB150	T63D4	3.0
2.7	504	664.5	2.0	CB130	T63D4	2.2
2.7	342	517.1	0.6	CB85	T71C6	0.9
2.6	525	704.1	4.6	CB180	T71B4	4.3
2.6	368	762.2	5.3	CB180	T80A6	4.5
2.6	525	720.5	4.5	CB180	T63D4	4.3
2.5	368	786.9	5.1	CB180	T71C6	4.5
2.4	394	621.4	1.0	CB110	T80A6	1.6
2.4	576	742.0	2.5	CB150	T71B4	3.0
2.4	576	726.9	1.8	CB130	T71B4	2.2
2.3	403	819.1	3.0	CB150	T80A6	3.2
2.3	576	758.2	2.5	CB150	T63D4	3.0
2.3	403	788.7	1.9	CB130	T80A6	2.2
2.3	576	742.9	1.7	CB130	T63D4	2.2
2.3	600	759.2	6.3	CB215	T71B4	4.9
2.3	600	790.4	3.9	CB180	T71B4	4.2
2.3	600	666.7	2.7	63/130	T71B4	1.7
2.3	600	681.4	1.5	63/110	T71B4	1.7
2.3	600	681.4	1.5	50/110	T71B4	1.2
2.3	600	620.8	0.8	40/85	T71B4	0.7
2.3	600	651.4	0.8	63/85	T71B4	1.7
2.3	600	651.4	0.8	50/85	T71B4	1.2
2.3	403	844.6	2.9	CB150	T71C6	3.2
2.3	403	813.1	1.8	CB130	T71C6	2.2
2.2	420	867.6	4.6	CB180	T80A6	4.5
2.2	600	776.5	6.2	CB215	T63D4	4.9
2.2	600	807.9	3.8	CB180	T63D4	4.2
2.2	600	696.8	1.4	50/110	T63D4	1.2
2.2	600	633.6	0.8	40/85	T63D4	0.7
2.2	600	665.5	0.8	50/85	T63D4	1.2
2.2	428	867.3	6.4	CB215	T80A6	5.4
2.2	420	895.6	4.4	CB180	T71C6	4.5
2.2	434	830.3	4.1	CB180	T80A6	4.2
2.1	428	895.6	6.2	CB215	T71C6	5.4
2.1	434	858.4	4.0	CB180	T71C6	4.2
2.0	460	726.6	0.9	CB110	T80A6	1.6
1.9	720	855.7	2.0	CB150	T71B4	2.7
1.9	720	818.7	1.4	CB130	T71B4	2.0
1.9	504	926.1	2.3	CB150	T80A6	2.9
1.9	504	906.4	1.6	CB130	T80A6	2.0
1.9	720	873.7	1.9	CB150	T63D4	2.7
1.9	720	835.3	1.3	CB130	T63D4	2.0
1.8	750	946.0	4.8	CB215	T71B4	4.9
1.8	750	888.5	3.0	CB180	T71B4	3.8
1.8	518	1035	5.6	CB215	T80A6	5.3
1.8	504	957.0	2.3	CB150	T71C6	2.9
1.8	504	937.8	1.6	CB130	T71C6	2.0
1.8	750	967.3	4.7	CB215	T63D4	4.9
1.8	525	986.9	3.6	CB180	T80A6	4.1
1.8	750	907.9	3.0	CB180	T63D4	3.8
1.8	518	1064	5.4	CB215	T71C6	5.3
1.7	525	1021	3.5	CB180	T71C6	4.1
1.6	576	1019	2.0	CB150	T80A6	2.8
1.6	576	1019	1.4	CB130	T80A6	2.0
1.6	576	1052	1.9	CB150	T71C6	2.8
1.6	576	1052	1.3	CB130	T71C6	2.0
1.6	600	1058	5.0	CB215	T80A6	4.7
1.6	600	1080	3.1	CB180	T80A6	3.9

1.7 - Getriebemotoren

n_2 min^{-1}	ir	T2 Nm	FS'		0.37 kW	Ptn kW
1.5	600	1092	4.8	CB215	T71C6	4.7
1.5	600	1116	3.0	CB180	T71C6	3.9
1.4	980	1061	1.7	63/130	T71B4	1.0
1.4	980	1061	1.7	70/130	T71B4	1.1
1.4	980	1034	1.0	50/110	T71B4	0.7
1.4	980	1060	0.9	70/110	T71B4	1.1
1.4	980	1060	0.9	63/110	T71B4	1.0
1.4	980	1057	0.9	50/110	T63D4	0.7
1.3	710	1258	5.8	CB250	T80A6	7.2
1.3	720	1188	1.5	CB150	T80A6	2.6
1.3	720	1133	1.1	CB130	T80A6	1.8
1.3	710	1298	5.6	CB250	T71C6	7.2
1.3	720	1233	1.5	CB150	T71C6	2.6
1.3	720	1177	1.0	CB130	T71C6	1.8
1.3	750	1329	3.7	CB215	T80A6	4.7
1.3	750	1244	2.4	CB180	T80A6	3.6
1.2	750	1372	3.6	CB215	T71C6	4.7
1.2	750	1285	2.3	CB180	T71C6	3.6
1.0	1372	1236	1.5	70/130	T71B4	1.1
1.0	1372	1236	1.5	63/130	T71B4	1.0
1.0	1372	1201	0.8	50/110	T71B4	0.7
1.0	1372	1238	0.8	63/110	T71B4	1.0
1.0	1372	1238	0.8	70/110	T71B4	1.1
0.98	1372	1225	0.8	50/110	T63D4	0.7
0.70	1960	1617	1.1	63/130	T71B4	1.0
0.70	1960	1617	1.1	70/130	T71B4	1.1
0.70	1960	1616	0.6	63/110	T71B4	1.0
0.70	1960	1616	0.6	70/110	T71B4	1.1
0.70	1960	1616	0.6	50/110	T71B4	0.7
0.68	1960	1659	0.6	50/110	T63D4	0.7
0.49	2800	1947	0.9	70/130	T71B4	0.9
0.49	2800	2018	0.9	63/130	T71B4	0.8
0.34	4000	2494	0.7	70/130	T71B4	0.8
0.34	4000	2494	0.7	63/130	T71B4	0.7

1.7 - Motoriduttori

n_2 min^{-1}	ir	T2 Nm	FS'		0.55 kW	Ptn kW
572	5	7.9	3.4	R40	T71B2	1.1
409	7	10.9	4.6	R50	T71B2	1.5
409	7	10.8	2.5	R40	T71B2	1.0
286	10	15.4	6.0	R63	T71B2	2.0
286	10	15.4	3.6	R50	T71B2	1.4
286	10	15.2	2.0	R40	T71B2	0.9
280	5	16.0	2.3	R40	T71C4	1.1
204	7	21.9	6.0	R70	T80A4	2.5
204	7	21.6	5.3	R63	T80A4	2.2
204	7	21.6	3.1	R50	T80A4	1.5
200	7	22.1	5.2	R63	T71C4	2.2
200	7	22.1	3.1	R50	T71C4	1.5
200	7	21.8	1.7	R40	T71C4	1.0
191	15	22.6	4.3	R63	T71B2	1.7
191	15	22.6	2.6	R50	T71B2	1.2
191	15	22.0	1.5	R40	T71B2	0.7
143	10	30.5	4.7	R70	T80A4	2.2
143	10	30.5	4.1	R63	T80A4	2.0
143	20	29.4	3.5	R63	T71B2	1.5
143	10	30.1	2.4	R50	T80A4	1.4
143	20	29.0	2.0	R50	T71B2	1.0
143	20	27.9	1.0	R40	T71B2	0.6
140	10	31.1	4.0	R63	T71C4	2.0
140	10	30.8	2.4	R50	T71C4	1.4
140	10	30.4	1.4	R40	T71C4	0.9
133	7	33.2	4.8	R70	T80B6	2.4
133	7	33.2	4.1	R63	T80B6	2.2
133	7	32.8	2.5	R50	T80B6	1.4
102	28	38.6	2.7	R63	T71B2	1.2
102	28	38.1	1.6	R50	T71B2	0.8
102	28	36.5	0.9	R40	T71B2	0.5
95	15	44.1	3.3	R70	T80A4	1.9
95	15	44.1	3.0	R63	T80A4	1.7
95	15	44.1	1.7	R50	T80A4	1.2
93	15	45.0	2.9	R63	T71C4	1.7
93	15	45.0	1.7	R50	T71C4	1.2
93	15	43.3	1.0	R40	T71C4	0.7
93	10	46.3	3.6	R70	T80B6	2.1
93	10	45.8	3.3	R63	T80B6	1.8
93	10	45.7	1.9	R50	T80B6	1.3
72	20	56.6	2.7	R70	T80A4	1.7
72	40	52.1	2.4	R70	T71B2	1.2
72	20	56.6	2.4	R63	T80A4	1.5
72	40	52.1	2.2	R63	T71B2	1.1
72	20	55.8	1.3	R50	T80A4	1.0
72	40	51.4	1.2	R50	T71B2	0.7
72	40	47.7	0.7	R40	T71B2	0.4
70	20	57.8	2.4	R63	T71C4	1.5
70	20	57.0	1.3	R50	T71C4	1.0
70	20	54.7	0.7	R40	T71C4	0.6
67	43	62.4	5.3	CB85	T71B2	2.4
65	44	63.0	2.7	CB70	T71B2	1.8
62	15	66.1	2.6	R70	T80B6	1.7
62	15	66.1	2.3	R63	T80B6	1.6
62	15	67.0	1.3	R50	T80B6	1.2
60	48	69.6	1.3	CB50	T71B2	1.2
58	49	61.2	2.1	R70	T71B2	1.1
58	49	62.1	1.6	R63	T71B2	1.0
58	49	60.3	0.9	R50	T71B2	0.7
56	51	74.0	4.5	CB85	T71B2	2.4
56	51	73.0	2.3	CB70	T71B2	1.8
55	52	75.5	1.2	CB50	T71B2	1.2
51	28	73.0	2.0	R70	T80A4	1.3
51	56	68.9	1.9	R70	T71B2	1.0
51	28	73.0	1.8	R63	T80A4	1.2
51	56	68.9	1.5	R63	T71B2	0.9
51	28	72.0	1.1	R50	T80A4	0.8
51	56	66.9	0.8	R50	T71B2	0.6
50	28	74.5	1.8	R63	T71C4	1.2
50	28	73.6	1.1	R50	T71C4	0.8
50	28	70.4	0.6	R40	T71C4	0.5
48	59	85.6	4.1	CB85	T71B2	2.4
48	59	84.5	2.1	CB70	T71B2	1.8
47	61	88.5	1.1	CB50	T71B2	1.2
47	20	84.7	2.1	R70	T80B6	1.5
47	20	84.7	1.9	R63	T80B6	1.4
47	20	83.6	1.0	R50	T80B6	0.9
41	69	98.8	3.8	CB85	T71B2	2.4
41	70	99.0	1.9	CB70	T71B2	1.8
41	70	79.7	1.5	R70	T71B2	0.9
41	70	81.0	1.2	R63	T71B2	0.8
41	70	78.4	0.7	R50	T71B2	0.6

1.7 - *Gearmotors*

n_2 min^{-1}	ir	T2 Nm	FS'		0.55 kW	Ptn kW
39	73	89.9	1.0	CB50	T71B2	0.8
36	80	101.4	3.1	CB85	T71B2	1.7
36	40	101.4	3.1	R85	T80A4	1.6
36	40	98.5	1.6	R70	T80A4	1.2
36	40	98.5	1.5	R63	T80A4	1.1
36	80	88.2	1.3	R70	T71B2	0.8
36	80	89.6	1.0	R63	T71B2	0.8
36	40	97.1	0.8	R50	T80A4	0.7
35	40	100.6	1.6	R70	T71C4	1.2
35	40	100.6	1.4	R63	T71C4	1.1
35	40	99.0	0.8	R50	T71C4	0.7
34	83	103.7	1.6	CB70	T71B2	1.3
33	43	123.2	6.2	CB110	T80A4	3.8
33	43	121.6	3.3	CB85	T80A4	2.2
33	28	107.6	1.6	R70	T80B6	1.2
33	28	107.5	1.5	R63	T80B6	1.1
33	28	105.9	0.9	R50	T80B6	0.7
33	43	124.2	3.2	CB85	T71C4	2.2
33	44	122.8	1.7	CB70	T80A4	1.6
32	44	125.4	1.6	CB70	T71C4	1.6
32	90	110.7	0.8	CB50	T71B2	0.8
29	97	117.5	0.8	CB50	T71B2	0.8
29	49	117.0	2.5	R85	T80A4	1.6
29	49	115.1	1.4	R70	T80A4	1.1
29	49	115.2	1.1	R63	T80A4	1.0
29	49	113.5	0.6	R50	T80A4	0.7
29	48	138.8	0.8	CB50	T71C4	1.1
29	100	106.5	1.0	R70	T71B2	0.8
29	100	104.8	0.8	R63	T71B2	0.7
29	49	117.7	1.4	R70	T71C4	1.1
29	49	117.7	1.1	R63	T71C4	1.0
29	49	115.8	0.6	R50	T71C4	0.7
28	51	146.1	5.3	CB110	T80A4	3.8
28	51	144.2	2.8	CB85	T80A4	2.2
28	51	142.4	1.4	CB70	T80A4	1.6
27	51	147.4	2.7	CB85	T71C4	2.2
27	51	145.5	1.4	CB70	T71C4	1.6
27	52	148.1	0.7	CB50	T71C4	1.1
26	110	137.4	2.5	CB85	T71B2	1.7
26	110	135.4	1.3	CB70	T71B2	1.3
26	56	135.7	2.1	R85	T80A4	1.6
26	56	127.6	1.3	R70	T80A4	1.0
26	56	127.5	1.0	R63	T80A4	0.9
25	114	138.2	0.7	CB50	T71B2	0.8
25	56	130.3	1.3	R70	T71C4	1.0
25	56	130.3	1.0	R63	T71C4	0.9
24	59	164.7	5.3	CB110	T80A4	3.8
24	59	162.5	2.8	CB85	T80A4	2.2
24	59	160.3	1.5	CB70	T80A4	1.6
24	59	166.0	2.7	CB85	T71C4	2.2
24	59	163.7	1.4	CB70	T71C4	1.6
23	40	149.1	2.4	R85	T80B6	1.5
23	40	144.5	1.3	R70	T80B6	1.1
23	40	144.7	1.1	R63	T80B6	1.0
23	40	142.1	0.6	R50	T80B6	0.7
23	61	174.2	0.6	CB50	T71C4	1.1
22	129	158.8	2.3	CB85	T71B2	1.7
22	130	157.5	1.2	CB70	T71B2	1.3
22	43	184.5	4.8	CB110	T80B6	3.8
22	43	182.1	2.5	CB85	T80B6	2.2
21	44	183.9	1.3	CB70	T80B6	1.6
21	69	192.7	4.6	CB110	T80A4	3.8
21	69	190.1	2.4	CB85	T80A4	2.2
20	70	156.9	1.7	R85	T80A4	1.3
20	70	190.4	1.2	CB70	T80A4	1.6
20	70	146.6	1.0	R70	T80A4	0.9
20	70	149.0	0.8	R63	T80A4	0.8
20	69	194.2	2.3	CB85	T71C4	2.2
20	70	194.4	1.2	CB70	T71C4	1.6
20	70	149.8	1.0	R70	T71C4	0.9
20	70	152.5	0.8	R63	T71C4	0.8
19.2	73	175.3	0.6	CB50	T71C4	0.7
19.0	49	171.5	1.9	R85	T80B6	1.3
19.0	49	166.1	1.1	R70	T80B6	1.0
19.0	49	168.7	0.8	R63	T80B6	0.9
18.2	51	213.1	4.6	CB110	T80B6	3.4
18.2	51	210.2	2.4	CB85	T80B6	2.0
18.2	51	210.3	1.1	CB70	T80B6	1.5
17.9	80	202.7	3.9	CB110	T80A4	2.9
17.9	80	191.0	2.0	CB85	T80A4	1.5

1.7 - Getriebemotoren

n_2 min^{-1}	ir	T2 Nm	FS'		0.55 kW	Ptn kW
17.9	80	170.5	1.4	R85	T80A4	1.2
17.9	80	158.6	0.9	R70	T80A4	0.8
17.9	80	161.8	0.7	R63	T80A4	0.8
17.7	162	193.4	6.0	CB130	T71B2	3.2
17.5	80	195.1	2.0	CB85	T71C4	1.5
17.5	80	162.2	0.9	R70	T71C4	0.8
17.5	80	165.3	0.7	R63	T71C4	0.8
17.2	166	183.0	1.0	CB70	T71B2	1.0
17.2	83	195.3	1.0	CB70	T80A4	1.2
17.0	168	191.3	1.7	CB85	T71B2	1.4
16.9	83	199.1	1.0	CB70	T71C4	1.2
16.8	85	224.8	6.4	CB130	T80A4	4.0
16.6	56	196.1	1.6	R85	T80B6	1.3
16.6	56	183.3	1.0	R70	T80B6	0.9
16.6	56	183.3	0.8	R63	T80B6	0.8
16.5	85	229.6	6.3	CB130	T71C4	4.0
16.0	58	249.0	6.5	CB130	T80B6	4.3
15.8	59	246.6	4.0	CB110	T80B6	3.4
15.8	59	243.4	2.1	CB85	T80B6	2.0
15.8	59	239.9	1.1	CB70	T80B6	1.5
14.3	100	194.7	1.1	R85	T80A4	1.1
14.3	100	187.2	0.7	R70	T80A4	0.8
14.2	202	237.4	5.2	CB130	T71B2	3.1
14.0	100	191.3	0.7	R70	T71C4	0.8
13.5	69	288.4	3.4	CB110	T80B6	3.4
13.5	69	284.4	1.8	CB85	T80B6	2.0
13.3	70	225.3	1.3	R85	T80B6	1.2
13.3	70	284.7	0.9	CB70	T80B6	1.5
13.3	70	213.2	0.8	R70	T80B6	0.8
13.3	70	213.3	0.6	R63	T80B6	0.8
13.0	110	266.7	3.4	CB110	T80A4	2.9
13.0	110	250.6	1.7	CB85	T80A4	1.5
13.0	110	250.3	0.9	CB70	T80A4	1.2
12.9	72	304.9	5.6	CB130	T80B6	4.2
12.7	110	255.7	1.7	CB85	T71C4	1.5
12.7	110	255.9	0.9	CB70	T71C4	1.2
12.7	225	247.9	1.4	CB85	T71B2	1.4
12.5	228	238.9	0.9	CB70	T71B2	1.0
12.4	115	300.0	5.2	CB130	T80A4	3.9
12.4	231	263.0	4.8	CB130	T71B2	3.0
12.2	115	306.5	5.1	CB130	T71C4	3.9
11.6	80	298.2	3.0	CB110	T80B6	2.9
11.6	80	280.2	1.5	CB85	T80B6	1.5
11.6	80	244.1	1.1	R85	T80B6	1.1
11.6	80	226.2	0.7	R70	T80B6	0.8
11.2	83	291.0	0.8	CB70	T80B6	1.2
11.1	129	312.6	2.9	CB110	T80A4	2.9
11.1	129	293.7	1.5	CB85	T80A4	1.5
11.0	130	295.8	0.8	CB70	T80A4	1.2
10.9	85	336.0	4.8	CB130	T80B6	3.5
10.9	129	300.1	1.4	CB85	T71C4	1.5
10.8	130	302.2	0.8	CB70	T71C4	1.2
10.2	140	313.9	5.3	63/130	T80A4	2.2
10.2	140	319.0	5.2	70/130	T80A4	2.5
10.2	140	308.6	3.2	63/110	T80A4	2.2
10.2	140	308.6	3.2	50/110	T80A4	1.5
10.2	140	313.7	3.2	70/110	T80A4	2.5
10.2	140	308.6	1.6	63/85	T80A4	2.2
10.2	140	308.6	1.6	70/85	T80A4	2.5
10.2	140	308.6	1.6	50/85	T80A4	1.5
10.2	140	293.2	0.9	63/70	T80A4	2.2
10.2	140	293.2	0.9	50/70	T80A4	1.5
10.0	140	320.4	5.2	63/130	T71C4	2.2
10.0	140	315.2	3.2	63/110	T71C4	2.2
10.0	140	315.2	3.2	50/110	T71C4	1.5
10.0	140	310.0	1.6	40/85	T71C4	1.0
10.0	140	315.0	1.6	63/85	T71C4	2.2
10.0	140	315.0	1.6	50/85	T71C4	1.5
10.0	286	262.6	0.9	CB85	T71B2	1.1
10.0	140	294.4	0.9	40/70	T71C4	1.0
10.0	140	299.2	0.9	63/70	T71C4	2.2
10.0	140	299.2	0.9	50/70	T71C4	1.5
10.0	140	299.5	0.8	40/63	T71C4	1.0
9.9	288	328.0	6.4	CB150	T71B2	3.9
9.9	144	370.2	4.4	CB130	T80A4	3.7
9.9	288	322.7	4.1	CB130	T71B2	2.9
9.7	144	378.3	4.3	CB130	T71C4	3.7
9.4	303	283.9	0.8	CB70	T71B2	0.8
9.3	100	282.6	0.9	R85	T80B6	1.0
8.9	323	362.0	5.0	CB150	T71B2	3.8

1.7 - Motoriduttori

n_2 min^{-1}	ir	T2 Nm	FS'		0.55 kW	Ptn kW
8.9	323	350.1	3.1	CB130	T71B2	2.7
8.8	162	374.8	5.9	CB150	T80A4	4.0
8.8	162	368.9	3.8	CB130	T80A4	3.0
8.6	162	383.0	5.8	CB150	T71C4	4.0
8.6	162	376.9	3.7	CB130	T71C4	3.0
8.6	166	341.6	0.7	CB70	T80A4	1.0
8.5	168	382.6	2.1	CB110	T80A4	2.3
8.5	168	357.7	1.1	CB85	T80A4	1.3
8.5	110	391.7	2.6	CB110	T80B6	2.4
8.5	110	366.7	1.3	CB85	T80B6	1.3
8.5	110	366.7	0.7	CB70	T80B6	1.0
8.4	166	348.4	0.6	CB70	T71C4	1.0
8.4	342	314.5	0.8	CB85	T71B2	1.1
8.3	168	365.7	1.1	CB85	T71C4	1.3
8.1	115	454.4	6.0	CB150	T80B6	4.9
8.1	115	448.0	3.8	CB130	T80B6	3.4
7.3	394	347.2	0.7	CB85	T71B2	1.0
7.2	129	459.1	2.2	CB110	T80B6	2.4
7.2	129	430.0	1.1	CB85	T80B6	1.3
7.2	200	433.5	4.2	63/130	T80A4	2.0
7.2	200	433.5	4.2	70/130	T80A4	2.2
7.2	200	426.0	2.3	50/110	T80A4	1.4
7.2	200	433.4	2.3	63/110	T80A4	2.0
7.2	200	433.4	2.3	70/110	T80A4	2.2
7.2	200	418.6	1.2	70/85	T80A4	2.2
7.2	200	418.6	1.2	63/85	T80A4	2.0
7.2	200	418.6	1.2	50/85	T80A4	1.4
7.2	200	403.8	0.7	50/70	T80A4	1.4
7.2	200	411.1	0.7	63/70	T80A4	2.0
7.1	403	443.9	4.3	CB150	T71B2	3.7
7.1	403	429.0	2.7	CB130	T71B2	2.7
7.1	202	460.0	5.1	CB150	T80A4	3.9
7.1	202	452.4	3.2	CB130	T80A4	2.9
7.0	200	442.8	4.1	63/130	T71C4	2.0
7.0	200	435.1	2.3	50/110	T71C4	1.4
7.0	200	442.8	2.3	63/110	T71C4	2.0
7.0	200	420.5	1.2	40/85	T71C4	0.9
7.0	200	427.7	1.2	50/85	T71C4	1.4
7.0	200	427.7	1.2	63/85	T71C4	2.0
7.0	200	404.8	0.7	40/70	T71C4	0.9
7.0	200	413.2	0.7	50/70	T71C4	1.4
7.0	200	419.7	0.7	63/70	T71C4	2.0
7.0	200	405.6	0.6	40/63	T71C4	0.9
6.9	202	470.0	5.0	CB150	T71C4	3.9
6.9	202	462.3	3.2	CB130	T71C4	2.9
6.6	434	454.3	5.9	CB180	T71B2	4.7
6.5	144	569.2	5.0	CB150	T80B6	4.9
6.5	144	552.8	3.2	CB130	T80B6	3.3
6.4	225	487.5	1.8	CB110	T80A4	2.3
6.4	225	453.8	1.0	CB85	T80A4	1.3
6.2	225	464.4	0.9	CB85	T71C4	1.3
6.2	460	388.9	0.7	CB85	T71B2	1.0
6.2	231	509.1	4.6	CB150	T80A4	3.7
6.2	231	492.3	3.0	CB130	T80A4	2.7
6.1	231	519.9	4.5	CB150	T71C4	3.7
6.1	231	502.8	3.0	CB130	T71C4	2.7
5.8	248	546.2	6.3	CB180	T80A4	5.1
5.7	162	558.2	4.4	CB150	T80B6	3.8
5.7	162	539.8	2.8	CB130	T80B6	2.6
5.7	504	509.4	3.3	CB150	T71B2	3.3
5.7	504	500.4	2.3	CB130	T71B2	2.4
5.7	248	557.8	6.2	CB180	T71C4	5.1
5.5	168	531.0	1.8	CB110	T80B6	2.0
5.5	168	493.5	1.0	CB85	T80B6	1.1
5.5	261	565.5	6.0	CB180	T80A4	5.0
5.5	525	539.8	5.2	CB180	T71B2	4.6
5.4	261	578.2	5.9	CB180	T71C4	5.0
5.3	174	619.6	5.9	CB180	T80B6	5.5
5.1	280	524.1	3.1	70/130	T80A4	2.2
5.1	280	524.1	3.1	63/130	T80A4	2.0
5.1	280	514.0	1.9	50/110	T80A4	1.4
5.1	280	524.3	1.9	63/110	T80A4	2.0
5.1	280	524.3	1.9	70/110	T80A4	2.2
5.1	280	483.3	1.0	63/85	T80A4	2.0
5.1	280	483.3	1.0	50/85	T80A4	1.4
5.1	280	483.3	1.0	70/85	T80A4	2.2
5.1	280	483.3	0.6	63/70	T80A4	2.0
5.1	280	483.3	0.6	50/70	T80A4	1.4
5.0	280	535.6	3.0	63/130	T71C4	2.0
5.0	280	525.3	1.9	50/110	T71C4	1.4

1.7 - *Gearmotors*

n_2 min^{-1}	ir	T2 Nm	FS'		0.55 kW	Ptn kW
5.0	280	535.5	1.9	63/110	T71C4	2.0
5.0	286	514.7	1.1	CB110	T80A4	1.8
5.0	280	483.3	1.0	40/85	T71C4	0.9
5.0	280	493.7	1.0	63/85	T71C4	2.0
5.0	280	493.7	1.0	50/85	T71C4	1.4
5.0	286	462.7	0.6	CB85	T80A4	1.0
5.0	280	483.3	0.6	40/70	T71C4	0.9
5.0	288	623.7	4.0	CB150	T80A4	3.6
5.0	576	560.0	2.9	CB150	T71B2	3.2
5.0	288	602.3	2.6	CB130	T80A4	2.6
5.0	576	549.5	2.0	CB130	T71B2	2.3
4.9	288	637.7	3.9	CB150	T71C4	3.6
4.9	288	616.0	2.5	CB130	T71C4	2.6
4.8	600	594.6	4.4	CB180	T71B2	4.4
4.7	304	648.2	5.4	CB180	T80A4	4.9
4.6	304	660.9	5.3	CB180	T71C4	4.9
4.6	202	685.2	3.7	CB150	T80B6	3.7
4.6	202	662.1	2.4	CB130	T80B6	2.5
4.4	323	687.8	3.1	CB150	T80A4	3.5
4.4	323	664.0	2.0	CB130	T80A4	2.5
4.4	213	709.2	5.2	CB180	T80B6	5.0
4.3	323	703.6	3.0	CB150	T71C4	3.5
4.3	323	679.1	1.9	CB130	T71C4	2.5
4.2	342	615.5	0.9	CB110	T80A4	1.8
4.1	225	711.9	1.4	CB110	T80B6	2.0
4.1	225	661.7	0.7	CB85	T80B6	1.1
4.0	231	756.0	3.4	CB150	T80B6	3.5
4.0	231	729.6	2.2	CB130	T80B6	2.4
4.0	720	661.7	2.2	CB150	T71B2	3.0
4.0	720	635.4	1.5	CB130	T71B2	2.2
3.9	368	769.6	4.8	CB180	T80A4	4.7
3.8	750	730.8	5.3	CB215	T71B2	5.3
3.8	750	689.1	3.4	CB180	T71B2	4.1
3.8	368	787.9	4.7	CB180	T71C4	4.7
3.8	248	812.5	4.7	CB180	T80B6	4.9
3.6	394	694.0	0.9	CB110	T80A4	1.8
3.6	400	748.3	2.4	63/130	T80A4	1.5
3.6	400	777.7	2.3	70/130	T80A4	1.7
3.6	400	762.8	1.3	70/110	T80A4	1.7
3.6	400	762.8	1.3	50/110	T80A4	1.0
3.6	400	762.8	1.3	63/110	T80A4	1.5
3.6	400	747.3	0.7	50/85	T80A4	1.0
3.6	400	763.9	0.7	70/85	T80A4	1.7
3.6	400	763.9	0.7	63/85	T80A4	1.5
3.6	261	841.1	4.5	CB180	T80B6	4.7
3.6	403	828.7	2.7	CB150	T80A4	3.4
3.6	403	799.2	1.7	CB130	T80A4	2.4
3.5	400	765.1	2.4	63/130	T71C4	1.5
3.5	400	780.1	1.3	50/110	T71C4	1.0
3.5	400	780.1	1.3	63/110	T71C4	1.5
3.5	400	735.3	0.7	40/85	T71C4	0.6
3.5	400	766.0	0.7	50/85	T71C4	1.0
3.5	400	781.3	0.6	63/85	T71C4	1.5
3.5	267	875.4	6.4	CB215	T80B6	6.0
3.5	403	847.7	2.6	CB150	T71C4	3.4
3.5	403	817.5	1.7	CB130	T71C4	2.4
3.4	420	880.6	4.1	CB180	T80A4	4.7
3.3	428	896.5	5.7	CB215	T80A4	5.8
3.3	420	899.2	4.0	CB180	T71C4	4.7
3.3	434	846.2	3.7	CB180	T80A4	4.3
3.3	428	915.5	5.6	CB215	T71C4	5.8
3.3	286	776.5	0.8	CB110	T80B6	1.8
3.2	434	861.9	3.6	CB180	T71C4	4.3
3.2	288	926.9	2.9	CB150	T80B6	3.4
3.2	288	894.1	1.9	CB130	T80B6	2.3
3.1	460	792.9	0.8	CB110	T80A4	1.8
3.1	300	1017	5.9	CB215	T80B6	6.3
3.1	304	961.4	4.0	CB180	T80B6	4.6
2.9	323	1003	2.3	CB150	T80B6	3.3
2.9	323	967.1	1.5	CB130	T80B6	2.2
2.8	504	943.3	2.1	CB150	T80A4	3.0
2.8	504	924.9	1.5	CB130	T80A4	2.2
2.8	508	990.7	6.2	CB250	T80A4	8.1
2.8	504	963.2	2.1	CB150	T71C4	3.0
2.8	504	945.0	1.4	CB130	T71C4	2.2
2.8	508	1009	6.1	CB250	T71C4	8.1
2.8	518	1066	5.0	CB215	T80A4	5.7
2.7	525	1004	3.2	CB180	T80A4	4.3
2.7	342	810.7	0.8	CB110	T80B6	1.6
2.7	518	1090	4.9	CB215	T71C4	5.7

1.7 - Getriebemotoren

n_2 min^{-1}	ir	T2 Nm	FS'		0.55 kW	Ptn kW
2.7	525	1023	3.2	CB180	T71C4	4.3
2.5	368	1142	3.5	CB180	T80B6	4.5
2.5	573	1072	6.2	CB250	T80A4	7.7
2.5	375	1207	5.0	CB215	T80B6	5.8
2.5	576	1059	1.8	CB150	T80A4	3.0
2.5	576	1038	1.2	CB130	T80A4	2.2
2.4	573	1098	6.1	CB250	T71C4	7.7
2.4	576	1081	1.7	CB150	T71C4	3.0
2.4	576	1060	1.2	CB130	T71C4	2.2
2.4	600	1082	4.5	CB215	T80A4	4.9
2.4	600	1126	2.7	CB180	T80A4	4.2
2.4	600	949.2	1.9	63/130	T80A4	1.7
2.4	600	949.2	1.9	70/130	T80A4	1.9
2.4	600	971.7	1.0	63/110	T80A4	1.7
2.4	600	971.7	1.0	70/110	T80A4	1.9
2.4	600	971.7	1.0	50/110	T80A4	1.2
2.4	394	935.9	0.7	CB110	T80B6	1.6
2.3	600	1105	4.4	CB215	T71C4	4.9
2.3	600	1150	2.6	CB180	T71C4	4.2
2.3	600	970	1.9	63/130	T71C4	1.7
2.3	600	993	1.0	50/110	T71C4	1.2
2.3	600	993	1.0	63/110	T71C4	1.7
2.3	403	1228	2.0	CB150	T80B6	3.2
2.3	403	1183	1.3	CB130	T80B6	2.2
2.2	420	1307	3.0	CB180	T80B6	4.5
2.2	428	1307	4.3	CB215	T80B6	5.4
2.1	435	1399	6.4	CB250	T80B6	8.8
2.1	434	1252	2.7	CB180	T80B6	4.2
2.0	710	1333	5.0	CB250	T80A4	7.7
2.0	720	1214	1.4	CB150	T80A4	2.7
2.0	720	1162	1.0	CB130	T80A4	2.0
2.0	710	1360	4.9	CB250	T71C4	7.7
1.9	720	1246	1.3	CB150	T71C4	2.7
1.9	720	1191	0.9	CB130	T71C4	2.0
1.9	750	1348	3.4	CB215	T80A4	4.9
1.9	750	1265	2.1	CB180	T80A4	3.8
1.9	750	1377	3.3	CB215	T71C4	4.9
1.9	750	1292	2.1	CB180	T71C4	3.8
1.9	504	1391	1.6	CB150	T80B6	2.9
1.9	504	1363	1.1	CB130	T80B6	2.0
1.8	508	1464	4.6	CB250	T80B6	7.7
1.8	518	1547	3.7	CB215	T80B6	5.3
1.8	525	1484	2.4	CB180	T80B6	4.1
1.6	573	1589	4.6	CB250	T80B6	7.4
1.6	576	1534	1.3	CB150	T80B6	2.8
1.6	576	1532	0.9	CB130	T80B6	2.0
1.6	600	1592	3.3	CB215	T80B6	4.7
1.6	600	1626	2.0	CB180	T80B6	3.9
1.5	980	1583	2.4	85/180	T80A4	1.6
1.5	980	1582	1.8	85/150	T80A4	1.6
1.5	980	1512	1.2	70/130	T80A4	1.1
1.5	980	1512	1.2	63/130	T80A4	1.0
1.5	980	1547	1.2	85/130	T80A4	1.6
1.5	980	1475	0.7	50/110	T80A4	0.7
1.5	980	1511	0.7	70/110	T80A4	1.1
1.5	980	1511	0.7	85/110	T80A4	1.1
1.5	980	1511	0.7	63/110	T80A4	1.0
1.4	980	1542	1.2	70/130	T71C4	1.1
1.4	980	1542	1.2	63/130	T71C4	1.0
1.4	980	1507	0.7	50/110	T71C4	0.7
1.4	980	1541	0.6	70/110	T71C4	1.1
1.4	980	1541	0.6	63/110	T71C4	1.0
1.3	710	1884	3.9	CB250	T80B6	7.2
1.3	720	1790	1.0	CB150	T80B6	2.6
1.3	720	1710	0.7	CB130	T80B6	1.8
1.2	750	1990	2.5	CB215	T80B6	4.7
1.2	750	1864	1.6	CB180	T80B6	3.6
1.0	1372	1920	2.4	85/180	T80A4	1.6
1.0	1372	1868	1.6	85/150	T80A4	1.6
1.0	1372	1768	1.0	63/130	T80A4	1.0
1.0	1372	1768	1.0	70/130	T80A4	1.1
1.0	1372	1768	1.0	85/130	T80A4	1.6
1.0	1372	1803	1.0	63/130	T71C4	1.0
1.0	1372	1803	1.0	70/130	T71C4	1.1
0.73	1960	2447	1.9	85/180	T80A4	1.6
0.73	1960	2446	1.2	85/150	T80A4	1.6
0.73	1960	2302	0.8	70/130	T80A4	1.1
0.73	1960	2302	0.8	63/130	T80A4	1.0
0.73	1960	2374	0.8	85/130	T80A4	1.6
0.71	1960	2368	0.8	63/130	T71C4	1.0

1.7 - Motoriduttori

n_2 min^{-1}	ir	T2 Nm	FS'		0.55 kW	Ptn kW
0.71	1960	2368	0.8	70/130	T71C4	1.1
0.51	2800	3194	1.4	85/180	T80A4	1.3
0.51	2800	3190	0.9	85/150	T80A4	1.3
0.51	2800	2781	0.6	70/130	T80A4	0.9
0.51	2800	2886	0.6	63/130	T80A4	0.8
0.51	2800	2991	0.6	85/130	T80A4	1.3
0.50	2800	2837	0.6	70/130	T71C4	0.9
0.50	2800	2938	0.6	63/130	T71C4	0.8
0.36	4000	3795	1.1	85/180	T80A4	1.1
0.36	4000	3650	0.8	85/150	T80A4	1.1
0.26	5600	5050	0.9	85/180	T80A4	1.1
0.20	7000	5776	0.8	85/180	T80A4	1.1
0.18	8000	6127	0.7	85/180	T80A4	1.1

1.7 - *Gearmotors*

n_2 min^{-1}	ir	T2 Nm	FS'		0.75 kW	Ptn kW
562	5	11	2.5	R40	T71C2	1.1
409	7	15.1	6.3	R70	T80A2	2.5
409	7	15.1	5.6	R63	T80A2	2.2
409	7	14.9	3.4	R50	T80A2	1.5
401	7	15.3	5.5	R63	T71C2	2.2
401	7	15.2	3.3	R50	T71C2	1.5
401	7	15.0	1.8	R40	T71C2	1.0
286	5	21.5	3.0	R50	T80B4	1.7
286	10	21.0	5.0	R70	T80A2	2.2
286	10	21.0	4.4	R63	T80A2	2.0
286	10	21.0	2.6	R50	T80A2	1.4
281	10	21.4	4.3	R63	T71C2	2.0
281	10	21.4	2.6	R50	T71C2	1.4
281	10	21.2	1.5	R40	T71C2	0.9
204	7	29.8	4.4	R70	T80B4	2.5
204	7	29.4	3.9	R63	T80B4	2.2
204	7	29.4	2.3	R50	T80B4	1.5
191	15	30.8	3.5	R70	T80A2	1.9
191	15	30.8	3.2	R63	T80A2	1.7
191	15	30.8	1.9	R50	T80A2	1.2
187	15	31.4	3.1	R63	T71C2	1.7
187	15	31.4	1.8	R50	T71C2	1.2
187	15	30.6	1.0	R40	T71C2	0.7
143	10	41.6	3.4	R70	T80B4	2.2
143	10	41.6	3.0	R63	T80B4	2.0
143	20	40.1	2.9	R70	T80A2	1.7
143	20	40.1	2.6	R63	T80A2	1.5
143	10	41.1	1.8	R50	T80B4	1.4
143	20	39.6	1.4	R50	T80A2	1.0
141	20	40.8	2.6	R63	T71C2	1.5
141	20	40.3	1.4	R50	T71C2	1.0
141	20	38.8	0.7	R40	T71C2	0.6
133	7	45.3	6.6	R85	T90S6	3.2
133	7	45.3	3.5	R70	T90S6	2.4
133	7	45.3	3.0	R63	T90S6	2.2
131	7	45.8	3.5	R70	T80C6	2.4
131	7	45.8	3.0	R63	T80C6	2.2
131	7	45.2	1.8	R50	T80C6	1.4
102	28	51.9	2.2	R70	T80A2	1.3
102	28	52.6	2.0	R63	T80A2	1.2
102	28	51.9	1.2	R50	T80A2	0.8
100	28	53.5	2.0	R63	T71C2	1.2
100	28	52.8	1.2	R50	T71C2	0.8
100	28	50.7	0.7	R40	T71C2	0.5
95	15	60.1	2.4	R70	T80B4	1.9
95	15	60.1	2.2	R63	T80B4	1.7
95	15	60.1	1.3	R50	T80B4	1.2
93	10	63.9	5.2	R85	T90S6	3.0
93	10	63.2	2.7	R70	T90S6	2.1
93	10	62.4	2.4	R63	T90S6	1.8
92	10	63.8	2.6	R70	T80C6	2.1
92	10	63.1	2.4	R63	T80C6	1.8
92	10	63.0	1.4	R50	T80C6	1.3
72	40	72.1	3.4	R85	T80A2	1.6
72	20	77.1	2.0	R70	T80B4	1.7
72	40	71.1	1.8	R70	T80A2	1.2
72	20	77.2	1.8	R63	T80B4	1.5
72	40	71.1	1.6	R63	T80A2	1.1
72	20	76.1	1.0	R50	T80B4	1.0
72	40	70.1	0.9	R50	T80A2	0.7
70	40	72.4	1.7	R70	T71C2	1.2
70	40	72.4	1.6	R63	T71C2	1.1
70	40	71.3	0.9	R50	T71C2	0.7
67	43	85.1	3.9	CB85	T80A2	2.4
65	43	86.6	3.8	CB85	T71C2	2.4
65	44	86.0	2.0	CB70	T80A2	1.8
64	44	87.5	1.9	CB70	T71C2	1.8
62	15	91.2	3.6	R85	T90S6	2.4
62	15	90.1	1.9	R70	T90S6	1.7
62	15	90.1	1.7	R63	T90S6	1.6
61	15	91.1	1.9	R70	T80C6	1.7
61	15	91.1	1.7	R63	T80C6	1.6
61	15	92.3	1.0	R50	T80C6	1.2
59	48	96.6	0.9	CB50	T71C2	1.2
58	49	85.9	2.6	R85	T80A2	1.6
58	49	83.5	1.6	R70	T80A2	1.1
58	49	84.7	1.2	R63	T80A2	1.0
58	49	82.2	0.7	R50	T80A2	0.7
57	49	84.9	1.5	R70	T71C2	1.1
57	49	86.2	1.1	R63	T71C2	1.0
57	49	83.7	0.7	R50	T71C2	0.7
56	51	102.2	6.2	CB110	T80A2	4.2

1.7 - Getriebemotoren

n_2 min^{-1}	ir	T2 Nm	FS'		0.75 kW	Ptn kW
56	51	100.9	3.3	CB85	T80A2	2.4
56	51	99.6	1.7	CB70	T80A2	1.8
55	51	102.7	3.2	CB85	T71C2	2.4
55	51	101.4	1.7	CB70	T71C2	1.8
54	52	104.8	0.9	CB50	T71C2	1.2
51	56	98.2	2.3	R85	T80A2	1.6
51	28	99.6	1.5	R70	T80B4	1.3
51	56	93.9	1.4	R70	T80A2	1.0
51	28	99.6	1.4	R63	T80B4	1.2
51	56	94.0	1.1	R63	T80A2	0.9
51	28	98.2	0.8	R50	T80B4	0.8
51	56	91.3	0.6	R50	T80A2	0.6
50	56	95.7	1.4	R70	T71C2	1.0
50	56	95.6	1.1	R63	T71C2	0.9
48	59	118.2	5.7	CB110	T80A2	4.2
48	59	116.8	3.0	CB85	T80A2	2.4
48	59	115.2	1.6	CB70	T80A2	1.8
48	59	118.8	3.0	CB85	T71C2	2.4
48	59	117.3	1.5	CB70	T71C2	1.8
47	20	118.6	3.1	R85	T90S6	2.2
47	20	115.5	1.5	R70	T90S6	1.5
47	20	115.5	1.4	R63	T90S6	1.4
46	61	122.8	0.8	CB50	T71C2	1.2
46	20	116.8	1.5	R70	T80C6	1.5
46	20	116.7	1.4	R63	T80C6	1.4
46	20	115.2	0.7	R50	T80C6	0.9
41	69	136.5	5.3	CB110	T80A2	4.2
41	69	134.8	2.8	CB85	T80A2	2.4
41	70	115.7	1.8	R85	T80A2	1.3
41	70	135.0	1.4	CB70	T80A2	1.8
41	70	108.7	1.1	R70	T80A2	0.9
41	70	110.5	0.9	R63	T80A2	0.8
41	69	137.2	2.8	CB85	T71C2	2.4
40	70	137.3	1.4	CB70	T71C2	1.8
40	70	110.6	1.1	R70	T71C2	0.9
40	70	112.4	0.8	R63	T71C2	0.8
38	73	124.8	0.7	CB50	T71C2	0.8
36	80	144.3	4.6	CB110	T80A2	3.2
36	80	138.2	2.3	CB85	T80A2	1.7
36	40	138.2	2.3	R85	T80B4	1.6
36	80	126.2	1.5	R85	T80A2	1.2
36	40	134.3	1.2	R70	T80B4	1.2
36	40	134.3	1.1	R63	T80B4	1.1
36	80	120.2	0.9	R70	T80A2	0.8
36	80	122.2	0.7	R63	T80A2	0.8
36	40	132.4	0.6	R50	T80B4	0.7
35	80	140.7	2.3	CB85	T71C2	1.7
35	80	122.3	0.9	R70	T71C2	0.8
35	80	124.3	0.7	R63	T71C2	0.8
34	83	141.4	1.2	CB70	T80A2	1.3
34	83	143.9	1.2	CB70	T71C2	1.3
33	43	168.0	4.6	CB110	T80B4	3.8
33	43	165.8	2.4	CB85	T80B4	2.2
33	28	148.8	2.1	R85	T90S6	1.6
33	28	146.7	1.2	R70	T90S6	1.2
33	28	146.6	1.1	R63	T90S6	1.1
33	28	148.3	1.1	R70	T80C6	1.2
33	28	148.3	1.1	R63	T80C6	1.1
33	28	146.2	0.6	R50	T80C6	0.7
33	44	167.5	1.2	CB70	T80B4	1.6
29	49	159.6	1.8	R85	T80B4	1.6
29	49	157.0	1.1	R70	T80B4	1.1
29	49	157.0	0.8	R63	T80B4	1.0
29	100	147.8	1.2	R85	T80A2	1.1
29	100	145.2	0.7	R70	T80A2	0.8
28	100	147.7	0.7	R70	T71C2	0.8
28	51	199.2	3.9	CB110	T80B4	3.8
28	51	196.6	2.0	CB85	T80B4	2.2
28	51	194.1	1.1	CB70	T80B4	1.6
26	110	198.3	3.6	CB110	T80A2	3.2
26	110	187.4	1.8	CB85	T80A2	1.7
26	110	184.7	1.0	CB70	T80A2	1.3
26	110	190.6	1.8	CB85	T71C2	1.7
26	110	187.8	1.0	CB70	T71C2	1.3
26	56	185.0	1.5	R85	T80B4	1.6
26	56	174.0	1.0	R70	T80B4	1.0
26	56	173.8	0.7	R63	T80B4	0.9
25	115	210.2	6.2	CB130	T80A2	4.2
25	58	223.7	6.5	CB130	T80B4	4.9
24	115	214.0	6.1	CB130	T71C2	4.2

1.7 - Motoriduttori

n_2 min^{-1}	ir	T2 Nm	FS'		0.75 kW	Ptn kW
24	59	224.6	3.9	CB110	T80B4	3.8
24	59	221.6	2.0	CB85	T80B4	2.2
24	59	218.6	1.1	CB70	T80B4	1.6
23	40	237.2	6.5	CB130	T90S6	4.7
23	40	209.5	3.5	R110	T90S6	2.6
23	40	203.4	1.8	R85	T90S6	1.5
23	40	197.0	0.9	R70	T90S6	1.1
23	40	197.3	0.8	R63	T90S6	1.0
23	40	239.8	6.4	CB130	T80C6	4.7
23	40	205.5	1.7	R85	T80C6	1.5
23	40	199.3	0.9	R70	T80C6	1.1
23	40	199.2	0.8	R63	T80C6	1.0
22	129	229.3	3.3	CB110	T80A2	3.2
22	129	216.5	1.7	CB85	T80A2	1.7
22	130	214.8	0.9	CB70	T80A2	1.3
22	129	220.4	1.6	CB85	T71C2	1.7
22	43	251.6	3.5	CB110	T90S6	3.8
22	43	248.4	1.8	CB85	T90S6	2.2
22	130	218.7	0.9	CB70	T71C2	1.3
21	43	254.3	3.5	CB110	T80C6	3.8
21	43	251.1	1.8	CB85	T80C6	2.2
21	44	250.7	0.9	CB70	T90S6	1.6
21	44	253.6	0.9	CB70	T80C6	1.6
21	69	262.7	3.3	CB110	T80B4	3.8
21	69	259.2	1.7	CB85	T80B4	2.2
20	70	213.9	1.2	R85	T80B4	1.3
20	70	259.6	0.9	CB70	T80B4	1.6
20	70	199.9	0.7	R70	T80B4	0.9
20	72	274.1	5.6	CB130	T80B4	4.7
20	144	259.7	5.3	CB130	T80A2	4.0
20	144	264.3	5.2	CB130	T71C2	4.0
19.0	49	249.0	2.7	R110	T90S6	2.5
19.0	49	233.9	1.4	R85	T90S6	1.3
19.0	49	230.0	0.6	R63	T90S6	0.9
18.8	49	236.4	1.4	R85	T80C6	1.3
18.8	49	228.7	0.8	R70	T80C6	1.0
18.8	49	232.5	0.6	R63	T80C6	0.9
18.6	50	296.5	5.5	CB130	T90S6	4.5
18.4	50	299.7	5.4	CB130	T80C6	4.5
18.2	51	290.6	3.4	CB110	T90S6	3.4
18.2	51	286.7	1.7	CB85	T90S6	2.0
18.2	51	286.8	0.8	CB70	T90S6	1.5
18.0	51	293.8	3.4	CB110	T80C6	3.4
18.0	51	289.8	1.7	CB85	T80C6	2.0
18.0	51	289.6	0.8	CB70	T80C6	1.5
17.9	80	276.4	2.9	CB110	T80B4	2.9
17.9	80	260.5	1.5	CB85	T80B4	1.5
17.9	80	232.5	1.0	R85	T80B4	1.2
17.9	80	216.3	0.7	R70	T80B4	0.8
17.7	162	263.7	4.4	CB130	T80A2	3.2
17.4	162	268.3	4.3	CB130	T71C2	3.2
17.2	166	249.6	0.8	CB70	T80A2	1.0
17.2	83	266.3	0.8	CB70	T80B4	1.2
17.0	168	277.8	2.4	CB110	T80A2	2.6
17.0	168	260.8	1.3	CB85	T80A2	1.4
16.9	166	254.0	0.7	CB70	T71C2	1.0
16.8	85	306.6	4.7	CB130	T80B4	4.0
16.7	168	265.3	1.2	CB85	T71C2	1.4
16.6	56	275.9	1.9	R110	T90S6	2.3
16.6	56	267.4	1.2	R85	T90S6	1.3
16.4	56	270.1	1.2	R85	T80C6	1.3
16.4	56	252.6	0.8	R70	T80C6	0.9
16.0	58	339.6	4.8	CB130	T90S6	4.3
15.9	58	343.2	4.7	CB130	T80C6	4.3
15.8	59	336.3	2.9	CB110	T90S6	3.4
15.8	59	331.9	1.5	CB85	T90S6	2.0
15.8	59	327.1	0.8	CB70	T90S6	1.5
15.6	59	340.0	2.9	CB110	T80C6	3.4
15.6	59	335.4	1.5	CB85	T80C6	2.0
15.6	59	331.0	0.8	CB70	T80C6	1.5
14.3	100	265.5	0.8	R85	T80B4	1.1
14.2	202	333.9	5.9	CB150	T80A2	4.4
14.2	202	323.7	3.8	CB130	T80A2	3.1
13.9	202	339.8	5.8	CB150	T71C2	4.4
13.9	202	329.5	3.7	CB130	T71C2	3.1
13.5	69	393.3	2.5	CB110	T90S6	3.4
13.5	69	387.8	1.3	CB85	T90S6	2.0
13.3	69	397.7	2.5	CB110	T80C6	3.4
13.3	69	392.3	1.3	CB85	T80C6	2.0
13.3	70	323.4	1.7	R110	T90S6	2.1

1.7 - *Gearmotors*

n_2 min^{-1}	ir	T2 Nm	FS'		0.75 kW	Ptn kW
13.3	70	307.2	1.0	R85	T90S6	1.2
13.3	70	388.3	0.7	CB70	T90S6	1.5
13.1	70	310.7	1.0	R85	T80C6	1.2
13.1	70	392.1	0.7	CB70	T80C6	1.5
13.0	110	363.7	2.5	CB110	T80B4	2.9
13.0	110	341.7	1.3	CB85	T80B4	1.5
13.0	110	341.3	0.7	CB70	T80B4	1.2
12.9	72	415.8	6.3	CB150	T90S6	5.9
12.9	72	415.7	4.1	CB130	T90S6	4.2
12.8	72	420.3	6.2	CB150	T80C6	5.9
12.8	72	420.4	4.1	CB130	T80C6	4.2
12.7	225	360.7	2.1	CB110	T80A2	2.5
12.7	225	338.0	1.0	CB85	T80A2	1.4
12.5	228	325.8	0.7	CB70	T80A2	1.0
12.5	225	344.2	1.0	CB85	T71C2	1.4
12.4	115	414.9	5.9	CB150	T80B4	5.3
12.4	115	409.1	3.8	CB130	T80B4	3.9
12.4	231	370.2	5.3	CB150	T80A2	4.1
12.4	231	358.7	3.5	CB130	T80A2	3.0
12.3	228	331.2	0.6	CB70	T71C2	1.0
12.2	231	377.0	5.3	CB150	T71C2	4.1
12.2	231	365.2	3.5	CB130	T71C2	3.0
11.6	80	406.7	2.2	CB110	T90S6	2.9
11.6	80	357.4	1.6	R110	T90S6	2.0
11.6	80	382.1	1.1	CB85	T90S6	1.5
11.6	80	332.8	0.8	R85	T90S6	1.1
11.5	80	411.2	2.2	CB110	T80C6	2.9
11.5	80	386.2	1.1	CB85	T80C6	1.5
11.5	80	336.6	0.8	R85	T80C6	1.1
11.1	129	426.3	2.1	CB110	T80B4	2.9
11.1	129	400.6	1.1	CB85	T80B4	1.5
10.9	85	471.4	5.4	CB150	T90S6	5.3
10.9	85	458.2	3.5	CB130	T90S6	3.5
10.8	85	476.7	5.3	CB150	T80C6	5.3
10.8	85	463.4	3.5	CB130	T80C6	3.5
10.2	140	428.0	3.9	63/130	T80B4	2.2
10.2	140	435.0	3.8	70/130	T80B4	2.5
10.2	140	420.9	2.4	63/110	T80B4	2.2
10.2	140	420.9	2.4	50/110	T80B4	1.5
10.2	140	427.8	2.3	70/110	T80B4	2.5
10.2	140	420.9	1.2	63/85	T80B4	2.2
10.2	140	420.9	1.2	50/85	T80B4	1.5
10.2	140	420.9	1.2	70/85	T80B4	2.5
10.2	140	399.8	0.7	63/70	T80B4	2.2
10.2	140	399.8	0.7	50/70	T80B4	1.5
10.0	286	379.5	1.3	CB110	T80A2	1.9
10.0	286	358.1	0.7	CB85	T80A2	1.1
9.9	144	512.1	5.1	CB150	T80B4	5.1
9.9	288	447.2	4.7	CB150	T80A2	3.9
9.9	144	504.8	3.2	CB130	T80B4	3.7
9.9	288	440.1	3.0	CB130	T80A2	2.9
9.8	286	364.5	0.7	CB85	T71C2	1.1
9.8	288	455.0	4.6	CB150	T71C2	3.9
9.8	288	447.7	3.0	CB130	T71C2	2.9
9.4	304	471.9	6.3	CB180	T80A2	5.4
9.3	100	408.3	1.2	R110	T90S6	1.8
9.3	100	385.3	0.6	R85	T90S6	1.0
9.2	304	480.6	6.2	CB180	T71C2	5.4
9.2	100	389.4	0.6	R85	T80C6	1.0
8.9	323	493.7	3.6	CB150	T80A2	3.8
8.9	323	477.4	2.3	CB130	T80A2	2.7
8.8	162	511.1	4.3	CB150	T80B4	4.0
8.8	162	503.0	2.8	CB130	T80B4	3.0
8.7	323	502.1	3.6	CB150	T71C2	3.8
8.7	323	485.9	2.3	CB130	T71C2	2.7
8.6	107	591.4	6.6	CB180	T80C6	7.0
8.5	168	521.7	1.5	CB110	T80B4	2.3
8.5	168	487.8	0.8	CB85	T80B4	1.3
8.5	110	534.2	1.9	CB110	T90S6	2.4
8.5	110	500.0	1.0	CB85	T90S6	1.3
8.4	110	539.6	1.9	CB110	T80C6	2.4
8.4	342	454.0	1.1	CB110	T80A2	1.9
8.4	110	505.6	0.9	CB85	T80C6	1.3
8.2	174	566.3	5.9	CB180	T80B4	5.8
8.1	115	619.7	4.4	CB150	T90S6	4.9
8.1	115	610.9	2.8	CB130	T90S6	3.4
8.0	115	626.7	4.3	CB150	T80C6	4.9
8.0	115	617.7	2.8	CB130	T80C6	3.4
7.8	368	562.3	5.6	CB180	T80A2	5.2
7.6	368	571.9	5.5	CB180	T71C2	5.2

1.7 - Getriebemotoren

n_2 min^{-1}	ir	T2 Nm	FS'		0.75 kW	Ptn kW
7.5	124	678.1	5.9	CB180	T90S6	7.0
7.4	124	685.3	5.9	CB180	T80C6	7.0
7.3	394	513.0	1.0	CB110	T80A2	1.9
7.2	129	626.0	1.6	CB110	T90S6	2.4
7.2	129	586.3	0.8	CB85	T90S6	1.3
7.2	200	591.1	3.0	70/130	T80B4	2.2
7.2	200	591.1	3.0	63/130	T80B4	2.0
7.2	200	580.9	1.7	50/110	T80B4	1.4
7.2	200	591.0	1.7	63/110	T80B4	2.0
7.2	200	591.0	1.7	70/110	T80B4	2.2
7.2	200	570.8	0.9	50/85	T80B4	1.4
7.2	200	570.8	0.9	63/85	T80B4	2.0
7.2	200	570.8	0.9	70/85	T80B4	2.2
7.1	129	632.9	1.6	CB110	T80C6	2.4
7.1	129	593.1	0.8	CB85	T80C6	1.3
7.1	403	605.3	3.1	CB150	T80A2	3.7
7.1	403	585.0	2.0	CB130	T80A2	2.7
7.1	202	627.3	3.7	CB150	T80B4	3.9
7.1	202	617.0	2.4	CB130	T80B4	2.9
7.0	403	616.6	3.1	CB150	T71C2	3.7
7.0	403	596.2	2.0	CB130	T71C2	2.7
6.8	420	641.6	4.9	CB180	T80A2	5.2
6.7	213	651.1	5.1	CB180	T80B4	5.2
6.7	420	653.1	4.8	CB180	T71C2	5.2
6.6	434	619.5	4.3	CB180	T80A2	4.7
6.6	428	665.0	6.5	CB215	T71C2	6.4
6.5	434	631.0	4.2	CB180	T71C2	4.7
6.5	144	776.2	3.7	CB150	T90S6	4.9
6.5	144	753.8	2.4	CB130	T90S6	3.3
6.4	144	784.5	3.6	CB150	T80C6	4.9
6.4	144	762.4	2.3	CB130	T80C6	3.3
6.4	225	664.7	1.3	CB110	T80B4	2.3
6.4	225	618.8	0.7	CB85	T80B4	1.3
6.2	460	587.3	0.9	CB110	T80A2	1.9
6.2	150	808.6	5.2	CB180	T90S6	6.8
6.2	231	694.2	3.4	CB150	T80B4	3.7
6.2	231	671.3	2.2	CB130	T80B4	2.7
6.1	150	817.9	5.1	CB180	T80C6	6.8
5.8	248	744.8	4.6	CB180	T80B4	5.1
5.7	162	761.2	3.2	CB150	T90S6	3.8
5.7	162	736.1	2.1	CB130	T90S6	2.6
5.7	162	769.2	3.2	CB150	T80C6	3.8
5.7	162	744.2	2.1	CB130	T80C6	2.6
5.7	504	694.6	2.5	CB150	T80A2	3.3
5.7	504	682.4	1.7	CB130	T80A2	2.4
5.6	504	706.1	2.4	CB150	T71C2	3.3
5.6	504	693.3	1.7	CB130	T71C2	2.4
5.5	168	724.0	1.3	CB110	T90S6	2.0
5.5	168	672.9	0.7	CB85	T90S6	1.1
5.5	518	778.4	5.8	CB215	T80A2	6.3
5.5	261	771.1	4.4	CB180	T80B4	5.0
5.5	168	732.0	1.3	CB110	T80C6	2.0
5.5	168	679.2	0.7	CB85	T80C6	1.1
5.5	525	736.0	3.8	CB180	T80A2	4.6
5.4	518	792.9	5.7	CB215	T71C2	6.3
5.4	267	815.1	6.3	CB215	T80B4	6.4
5.4	525	749.7	3.7	CB180	T71C2	4.6
5.3	174	845.0	4.3	CB180	T90S6	5.5
5.3	174	853.1	4.3	CB180	T80C6	5.5
5.1	280	714.7	2.2	63/130	T80B4	2.0
5.1	280	714.7	2.2	70/130	T80B4	2.2
5.1	280	700.9	1.4	50/110	T80B4	1.4
5.1	280	715.0	1.4	63/110	T80B4	2.0
5.1	280	715.0	1.4	70/110	T80B4	2.2
5.1	280	659.1	0.8	50/85	T80B4	1.4
5.1	280	659.1	0.8	70/85	T80B4	2.2
5.1	280	659.1	0.8	63/85	T80B4	2.0
5.0	286	701.8	0.8	CB110	T80B4	1.8
5.0	288	850.5	2.9	CB150	T80B4	3.6
5.0	576	763.7	2.1	CB150	T80A2	3.2
5.0	288	821.3	1.9	CB130	T80B4	2.6
5.0	576	749.3	1.5	CB130	T80A2	2.3
4.9	576	777.8	2.1	CB150	T71C2	3.2
4.9	576	763.1	1.4	CB130	T71C2	2.3
4.8	300	930.9	5.9	CB215	T80B4	6.6
4.8	600	795.8	5.2	CB215	T80A2	5.3
4.8	600	810.8	3.2	CB180	T80A2	4.4
4.7	304	884.0	4.0	CB180	T80B4	4.9
4.7	600	811.2	5.1	CB215	T71C2	5.3
4.7	600	826.4	3.2	CB180	T71C2	4.4

1.7 - Motoriduttori

n_2 min^{-1}	ir	T2 Nm	FS'		0.75 kW	Ptn kW
4.6	202	934.3	2.7	CB150	T90S6	3.7
4.6	202	902.8	1.8	CB130	T90S6	2.5
4.6	202	944.4	2.7	CB150	T80C6	3.7
4.6	202	913.1	1.8	CB130	T80C6	2.5
4.4	323	937.9	2.3	CB150	T80B4	3.5
4.4	323	905.4	1.4	CB130	T80B4	2.5
4.4	213	1016	5.5	CB215	T90S6	6.6
4.4	213	967.1	3.8	CB180	T90S6	5.0
4.3	213	1028	5.5	CB215	T80C6	6.6
4.3	213	978.1	3.8	CB180	T80C6	5.0
4.2	342	839.3	0.7	CB110	T80B4	1.8
4.1	225	970.8	1.0	CB110	T90S6	2.0
4.1	225	981.2	1.0	CB110	T80C6	2.0
4.0	710	977.4	5.8	CB250	T80A2	8.4
4.0	231	1031	2.5	CB150	T90S6	3.5
4.0	231	994.9	1.6	CB130	T90S6	2.4
4.0	231	1044	2.5	CB150	T80C6	3.5
4.0	231	1008	1.6	CB130	T80C6	2.4
4.0	720	902.4	1.6	CB150	T80A2	3.0
4.0	720	866.5	1.1	CB130	T80A2	2.2
4.0	710	994.7	5.7	CB250	T71C2	8.4
3.9	720	918.4	1.6	CB150	T71C2	3.0
3.9	720	881.2	1.1	CB130	T71C2	2.2
3.9	368	1049	3.5	CB180	T80B4	4.7
3.8	375	1109	5.0	CB215	T80B4	6.1
3.8	750	996.5	3.9	CB215	T80A2	5.3
3.8	750	939.7	2.5	CB180	T80A2	4.1
3.8	248	1165	5.0	CB215	T90S6	6.4
3.8	750	1012	3.9	CB215	T71C2	5.3
3.8	248	1108	3.4	CB180	T90S6	4.9
3.8	750	955.1	2.4	CB180	T71C2	4.1
3.7	248	1178	4.9	CB215	T80C6	6.4
3.7	248	1120	3.4	CB180	T80C6	4.9
3.6	394	946.3	0.7	CB110	T80B4	1.8
3.6	400	1020	1.8	63/130	T80B4	1.5
3.6	400	1061	1.7	70/130	T80B4	1.7
3.6	400	1040	1.0	70/110	T80B4	1.7
3.6	400	1040	1.0	63/110	T80B4	1.5
3.6	400	1040	1.0	50/110	T80B4	1.0
3.6	261	1147	3.3	CB180	T90S6	4.7
3.6	403	1130	2.0	CB150	T80B4	3.4
3.6	403	1090	1.3	CB130	T80B4	2.4
3.5	261	1160	3.2	CB180	T80C6	4.7
3.5	267	1194	4.7	CB215	T90S6	6.0
3.5	267	1204	4.7	CB215	T80C6	6.0
3.4	420	1201	3.0	CB180	T80B4	4.7
3.3	428	1222	4.2	CB215	T80B4	5.8
3.3	435	1285	6.3	CB250	T80B4	9.2
3.3	434	1154	2.7	CB180	T80B4	4.3
3.2	288	1264	2.1	CB150	T90S6	3.4
3.2	288	1219	1.4	CB130	T90S6	2.3
3.2	288	1280	2.1	CB150	T80C6	3.4
3.2	288	1234	1.4	CB130	T80C6	2.3
3.1	300	1387	4.4	CB215	T90S6	6.3
3.1	300	1400	4.3	CB215	T80C6	6.3
3.1	304	1311	2.9	CB180	T90S6	4.6
3.0	304	1324	2.9	CB180	T80C6	4.6
2.9	323	1368	1.7	CB150	T90S6	3.3
2.9	323	1319	1.1	CB130	T90S6	2.2
2.9	323	1382	1.7	CB150	T80C6	3.3
2.9	323	1332	1.1	CB130	T80C6	2.2
2.8	504	1286	1.5	CB150	T80B4	3.0
2.8	504	1261	1.1	CB130	T80B4	2.2
2.8	508	1351	4.6	CB250	T80B4	8.1
2.8	518	1453	3.6	CB215	T80B4	5.7
2.7	525	1369	2.4	CB180	T80B4	4.3
2.6	360	1638	6.0	CB250	T90S6	9.2
2.6	360	1651	5.9	CB250	T80C6	9.2
2.5	368	1557	2.6	CB180	T90S6	4.5
2.5	573	1461	4.5	CB250	T80B4	7.7
2.5	368	1576	2.5	CB180	T80C6	4.5
2.5	375	1647	3.7	CB215	T90S6	5.8
2.5	576	1444	1.3	CB150	T80B4	3.0
2.5	576	1415	0.9	CB130	T80B4	2.2
2.5	375	1667	3.6	CB215	T80C6	5.8
2.4	600	1475	3.3	CB215	T80B4	4.9
2.4	600	1535	2.0	CB180	T80B4	4.2
2.4	600	1294	1.4	63/130	T80B4	1.7
2.4	600	1294	1.4	70/130	T80B4	1.9
2.4	600	1325	0.8	63/110	T80B4	1.7

1.7 - *Gearmotors*

n_2 min^{-1}	ir	T2 Nm	FS'		0.75 kW	Ptn kW
2.4	600	1325	0.8	50/110	T80B4	1.2
2.4	600	1325	0.8	70/110	T80B4	1.9
2.3	403	1674	1.4	CB150	T90S6	3.2
2.3	403	1613	0.9	CB130	T90S6	2.2
2.3	403	1696	1.4	CB150	T80C6	3.2
2.3	403	1634	0.9	CB130	T80C6	2.2
2.2	420	1783	2.2	CB180	T90S6	4.5
2.2	420	1799	2.2	CB180	T80C6	4.5
2.2	428	1782	3.1	CB215	T90S6	5.4
2.2	428	1799	3.1	CB215	T80C6	5.4
2.1	435	1908	4.7	CB250	T90S6	8.8
2.1	434	1707	2.0	CB180	T90S6	4.2
2.1	434	1723	2.0	CB180	T80C6	4.2
2.1	435	1935	4.6	CB250	T80C6	8.8
2.0	710	1817	3.7	CB250	T80B4	7.7
2.0	720	1655	1.0	CB150	T80B4	2.7
2.0	720	1584	0.7	CB130	T80B4	2.0
1.9	750	1838	2.5	CB215	T80B4	4.9
1.9	750	1725	1.6	CB180	T80B4	3.8
1.9	504	1897	1.1	CB150	T90S6	2.9
1.9	504	1859	0.8	CB130	T90S6	2.0
1.8	508	1996	3.4	CB250	T90S6	7.7
1.8	504	1917	1.1	CB150	T80C6	2.9
1.8	504	1878	0.8	CB130	T80C6	2.0
1.8	508	2018	3.4	CB250	T80C6	7.7
1.8	518	2109	2.7	CB215	T90S6	5.3
1.8	518	2132	2.7	CB215	T80C6	5.3
1.8	525	2023	1.8	CB180	T90S6	4.1
1.8	525	2046	1.7	CB180	T80C6	4.1
1.6	573	2167	3.4	CB250	T90S6	7.4
1.6	573	2180	3.3	CB250	T80C6	7.4
1.6	576	2091	1.0	CB150	T90S6	2.8
1.6	576	2090	0.7	CB130	T90S6	2.0
1.6	576	2103	1.0	CB150	T80C6	2.8
1.6	576	2102	0.7	CB130	T80C6	2.0
1.6	600	2171	2.4	CB215	T90S6	4.7
1.6	600	2217	1.5	CB180	T90S6	3.9
1.5	600	2201	2.4	CB215	T80C6	4.7
1.5	600	2247	1.5	CB180	T80C6	3.9
1.5	980	2158	1.8	85/180	T80B4	1.6
1.5	980	2158	1.3	85/150	T80B4	1.6
1.5	980	2061	0.9	70/130	T80B4	1.1
1.5	980	2061	0.9	63/130	T80B4	1.0
1.5	980	2109	0.9	85/130	T80B4	1.6
1.3	710	2570	2.8	CB250	T90S6	7.2
1.3	710	2589	2.8	CB250	T80C6	7.2
1.3	720	2442	0.7	CB150	T90S6	2.6
1.3	720	2464	0.7	CB150	T80C6	2.6
1.2	750	2714	1.8	CB215	T90S6	4.7
1.2	750	2541	1.2	CB180	T90S6	3.6
1.2	750	2736	1.8	CB215	T80C6	4.7
1.2	750	2562	1.1	CB180	T80C6	3.6
1.0	1372	2618	1.8	85/180	T80B4	1.6
1.0	1372	2547	1.1	85/150	T80B4	1.6
1.0	1372	2411	0.7	70/130	T80B4	1.1
1.0	1372	2411	0.7	63/130	T80B4	1.0
1.0	1372	2411	0.7	85/130	T80B4	1.6
0.73	1960	3337	1.4	85/180	T80B4	1.6
0.73	1960	3336	0.9	85/150	T80B4	1.6
0.51	2800	4356	1.1	85/180	T80B4	1.3
0.51	2800	4350	0.7	85/150	T80B4	1.3
0.36	4000	5175	0.8	85/180	T80B4	1.1
0.26	5600	6886	0.7	85/180	T80B4	1.1

1.7 - Getriebemotoren

n_2 min^{-1}	ir	T2 Nm	FS'		0.88 kW	Ptn kW
282	5	25.6	2.5	R50	T80C4	1.7
201	7	35.5	3.7	R70	T80C4	2.5
201	7	35	3.3	R63	T80C4	2.2
201	7	35.1	1.9	R50	T80C4	1.5
141	10	49.5	2.9	R70	T80C4	2.2
141	10	49.5	2.5	R63	T80C4	2
141	10	48.9	1.5	R50	T80C4	1.4
94	15	71.5	2	R70	T80C4	1.9
94	15	71.5	1.8	R63	T80C4	1.7
94	15	71.5	1.1	R50	T80C4	1.2
71	20	91.8	1.6	R70	T80C4	1.7
71	20	91.8	1.5	R63	T80C4	1.5
71	20	90.6	0.8	R50	T80C4	1
50	28	118.5	1.2	R70	T80C4	1.3
50	28	118.4	1.1	R63	T80C4	1.2
50	28	116.7	0.7	R50	T80C4	0.8
35	40	164.5	1.9	R85	T80C4	1.6
35	40	159.8	1	R70	T80C4	1.2
35	40	159.7	0.9	R63	T80C4	1.1
33	43	199.9	3.8	CB110	T80C4	3.8
33	43	197.4	2	CB85	T80C4	2.2
32	44	199.3	1	CB70	T80C4	1.6
29	49	189.8	1.5	R85	T80C4	1.6
29	49	186.8	0.9	R70	T80C4	1.1
29	49	186.8	0.7	R63	T80C4	1
28	50	232.5	6.3	CB130	T80C4	5.1
28	51	237.1	3.2	CB110	T80C4	3.8
28	51	234.1	1.7	CB85	T80C4	2.2
28	51	231	0.9	CB70	T80C4	1.6
25	56	220.2	1.3	R85	T80C4	1.6
25	56	207	0.8	R70	T80C4	1
25	56	207	0.6	R63	T80C4	0.9
24	58	266.2	5.5	CB130	T80C4	4.9
24	59	267.2	3.3	CB110	T80C4	3.8
24	59	263.8	1.7	CB85	T80C4	2.2
24	59	260.3	0.9	CB70	T80C4	1.6
20	69	312.6	2.8	CB110	T80C4	3.8
20	69	308.6	1.5	CB85	T80C4	2.2
20	70	254.6	1	R85	T80C4	1.3
20	70	308.7	0.8	CB70	T80C4	1.6
20	70	238	0.6	R70	T80C4	0.9
20	72	326.2	4.7	CB130	T80C4	4.7
17.6	80	329.2	2.4	CB110	T80C4	2.9
17.6	80	310.2	1.2	CB85	T80C4	1.5
17.6	80	276.6	0.9	R85	T80C4	1.2
17	83	316.3	0.6	CB70	T80C4	1.2
16.6	85	369.8	6.2	CB150	T80C4	5.5
16.6	85	364.8	4	CB130	T80C4	4
14.1	100	315.6	0.7	R85	T80C4	1.1
12.8	110	432.8	2.1	CB110	T80C4	2.9
12.8	110	406.5	1.1	CB85	T80C4	1.5
12.3	115	493.5	5	CB150	T80C4	5.3
12.3	115	486.7	3.2	CB130	T80C4	3.9
10.9	129	507.5	1.8	CB110	T80C4	2.9
10.9	129	476.5	0.9	CB85	T80C4	1.5
10.1	140	509.2	3.3	63/130	T80C4	2.2
10.1	140	517.5	3.2	70/130	T80C4	2.5
10.1	140	500.9	2	50/110	T80C4	1.5
10.1	140	500.9	2	63/110	T80C4	2.2
10.1	140	509	2	70/110	T80C4	2.5
10.1	140	500.6	1	50/85	T80C4	1.5
10.1	140	500.6	1	70/85	T80C4	2.5
10.1	140	500.6	1	63/85	T80C4	2.2
9.8	144	609.5	4.2	CB150	T80C4	5.1
9.8	144	600.8	2.7	CB130	T80C4	3.7
9.4	150	643.7	5.9	CB180	T80C4	7.3
8.7	162	608.7	3.6	CB150	T80C4	4
8.7	162	598.9	2.3	CB130	T80C4	3
8.4	168	620.9	1.3	CB110	T80C4	2.3
8.4	168	581.2	0.7	CB85	T80C4	1.3
8.1	174	674.3	4.9	CB180	T80C4	5.8
7.1	200	703.4	2.6	70/130	T80C4	2.2
7.1	200	703.4	2.6	63/130	T80C4	2
7.1	200	691.3	1.4	50/110	T80C4	1.4
7.1	200	703.4	1.4	63/110	T80C4	2
7.1	200	703.4	1.4	70/110	T80C4	2.2
7.1	200	679	0.7	70/85	T80C4	2.2
7.1	200	679	0.7	50/85	T80C4	1.4
7.1	200	679	0.7	63/85	T80C4	2
7	202	746.5	3.1	CB150	T80C4	3.9

1.7 - Motoriduttori

n_2 min^{-1}	ir	T2 Nm	FS'		0.88 kW	Ptn kW
7	202	734.3	2	CB130	T80C4	2.9
6.6	213	812.4	6.3	CB215	T80C4	7
6.6	213	774.4	4.3	CB180	T80C4	5.2
6.3	225	791.1	1.1	CB110	T80C4	2.3
6.1	231	826.6	2.8	CB150	T80C4	3.7
6.1	231	799.2	1.9	CB130	T80C4	2.7
5.7	248	930.5	5.7	CB215	T80C4	6.8
5.7	248	886.2	3.9	CB180	T80C4	5.1
5.4	261	918.1	3.7	CB180	T80C4	5
5.3	267	970.9	5.3	CB215	T80C4	6.4
5	280	850.2	1.9	70/130	T80C4	2.2
5	280	850.2	1.9	63/130	T80C4	2
5	280	834.1	1.2	50/110	T80C4	1.4
5	280	850.2	1.2	63/110	T80C4	2
5	280	850.2	1.2	70/110	T80C4	2.2
5	280	784.3	0.6	70/85	T80C4	2.2
5	280	784.3	0.6	63/85	T80C4	2
5	280	784.3	0.6	50/85	T80C4	1.4
4.9	286	835.6	0.7	CB110	T80C4	1.8
4.9	288	1012	2.4	CB150	T80C4	3.6
4.9	288	977.3	1.6	CB130	T80C4	2.6
4.7	300	1109	5	CB215	T80C4	6.6
4.6	304	1051	3.3	CB180	T80C4	4.9
4.4	323	1116	1.9	CB150	T80C4	3.5
4.4	323	1077	1.2	CB130	T80C4	2.5
3.8	368	1251	2.9	CB180	T80C4	4.7
3.8	375	1319	4.2	CB215	T80C4	6.1
3.5	400	1218	1.5	63/130	T80C4	1.5
3.5	400	1265	1.4	70/130	T80C4	1.7
3.5	400	1241	0.8	70/110	T80C4	1.7
3.5	400	1241	0.8	63/110	T80C4	1.5
3.5	400	1241	0.8	50/110	T80C4	1
3.5	403	1344	1.7	CB150	T80C4	3.4
3.5	403	1297	1.1	CB130	T80C4	2.4
3.4	420	1426	2.6	CB180	T80C4	4.7
3.3	428	1456	3.5	CB215	T80C4	5.8
3.3	434	1371	2.3	CB180	T80C4	4.3
3.2	435	1530	5.3	CB250	T80C4	9.2
2.8	504	1530	1.3	CB150	T80C4	3
2.8	504	1501	0.9	CB130	T80C4	2.2
2.8	508	1602	3.9	CB250	T80C4	8.1
2.7	518	1730	3.1	CB215	T80C4	5.7
2.7	525	1625	2	CB180	T80C4	4.3
2.5	573	1742	3.8	CB250	T80C4	7.7
2.5	576	1715	1.1	CB150	T80C4	3
2.5	576	1680	0.8	CB130	T80C4	2.2
2.4	600	1752	2.7	CB215	T80C4	4.9
2.4	600	1824	1.7	CB180	T80C4	4.2
2.4	600	1538	1.2	70/130	T80C4	1.9
2.4	600	1538	1.2	63/130	T80C4	1.7
2.4	600	1574	0.6	63/110	T80C4	1.7
2.4	600	1574	0.6	50/110	T80C4	1.2
2.4	600	1574	0.6	70/110	T80C4	1.9
2	710	2154	3.1	CB250	T80C4	7.7
2	720	1973	0.9	CB150	T80C4	2.7
1.9	750	2191	2.1	CB215	T80C4	4.9
1.9	750	2057	1.3	CB180	T80C4	3.8
1.4	980	2569	1.5	85/180	T80C4	1.6
1.4	980	2567	1.1	85/150	T80C4	1.6
1.4	980	2452	0.7	63/130	T80C4	1
1.4	980	2452	0.7	70/130	T80C4	1.1
1.4	980	2510	0.7	85/130	T80C4	1.6
1	1372	3100	1.5	85/180	T80C4	1.6
1	1372	3020	1	85/150	T80C4	1.6
1	1372	2854	0.6	70/130	T80C4	1.1
1	1372	2854	0.6	85/130	T80C4	1.6
1	1372	2854	0.6	63/130	T80C4	1
0.72	1960	3969	1.2	85/180	T80C4	1.6
0.72	1960	3969	0.7	85/150	T80C4	1.6
0.5	2800	5210	0.9	85/180	T80C4	1.3
0.35	4000	6244	0.7	85/180	T80C4	1.1

1.7 - *Gearmotors*

n_2 min^{-1}	ir	T2 Nm	FS'		1.1 kW	Ptn kW
570	5	16.0	2.8	R50	T80B2	1.7
407	7	22.2	4.3	R70	T80B2	2.5
407	7	22.2	3.8	R63	T80B2	2.2
407	7	21.9	2.3	R50	T80B2	1.5
285	10	31.0	3.4	R70	T80B2	2.2
285	10	31.0	3.0	R63	T80B2	2.0
285	10	31.0	1.8	R50	T80B2	1.4
280	5	32.3	2.0	R50	T80D4	1.7
204	7	43.7	5.7	R85	T90S4	3.4
204	7	43.7	3.0	R70	T90S4	2.5
204	7	43.2	2.7	R63	T90S4	2.2
200	7	44.6	3.0	R70	T80D4	2.5
200	7	44.1	2.6	R63	T80D4	2.2
200	7	44.1	1.5	R50	T80D4	1.5
190	15	45.3	2.4	R70	T80B2	1.9
190	15	45.3	2.2	R63	T80B2	1.7
190	15	45.3	1.3	R50	T80B2	1.2
143	10	61.7	4.5	R85	T90S4	3.2
143	10	61.0	2.3	R70	T90S4	2.2
143	10	61.0	2.1	R63	T90S4	2.0
143	20	59.0	2.0	R70	T80B2	1.7
143	20	59.0	1.8	R63	T80B2	1.5
143	20	58.2	1.0	R50	T80B2	1.0
140	10	62.3	2.3	R70	T80D4	2.2
140	10	62.3	2.0	R63	T80D4	2.0
140	10	61.5	1.2	R50	T80D4	1.4
131	7	67.1	4.4	R85	T90L6	3.2
131	7	67.1	2.4	R70	T90L6	2.4
131	7	67.1	2.0	R63	T90L6	2.2
102	28	76.4	1.5	R70	T80B2	1.3
102	28	77.4	1.4	R63	T80B2	1.2
102	28	76.4	0.8	R50	T80B2	0.8
95	15	89.2	3.2	R85	T90S4	2.7
95	15	88.2	1.6	R70	T90S4	1.9
95	15	88.1	1.5	R63	T90S4	1.7
93	15	90.1	1.6	R70	T80D4	1.9
93	15	90.1	1.5	R63	T80D4	1.7
93	15	90.1	0.8	R50	T80D4	1.2
92	10	94.8	3.5	R85	T90L6	3.0
92	10	93.6	1.8	R70	T90L6	2.1
92	10	92.5	1.6	R63	T90L6	1.8
72	20	116.1	2.7	R85	T90S4	2.4
72	20	113.1	1.3	R70	T90S4	1.7
72	20	113.2	1.2	R63	T90S4	1.5
71	40	106.1	2.3	R85	T80B2	1.6
71	40	104.7	1.2	R70	T80B2	1.2
71	40	104.7	1.1	R63	T80B2	1.1
71	40	103.2	0.6	R50	T80B2	0.7
70	20	115.6	1.3	R70	T80D4	1.7
70	20	115.5	1.2	R63	T80D4	1.5
70	20	114.0	0.6	R50	T80D4	1.0
66	43	126.8	5.0	CB110	T80B2	4.2
66	43	125.2	2.7	CB85	T80B2	2.4
65	44	126.5	1.3	CB70	T80B2	1.8
61	15	135.3	2.5	R85	T90L6	2.4
61	15	133.6	1.3	R70	T90L6	1.7
61	15	133.6	1.1	R63	T90L6	1.6
58	49	126.4	1.8	R85	T80B2	1.6
58	49	122.8	1.1	R70	T80B2	1.1
58	49	124.6	0.8	R63	T80B2	1.0
56	51	150.4	4.2	CB110	T80B2	4.2
56	51	148.5	2.2	CB85	T80B2	2.4
56	51	146.7	1.2	CB70	T80B2	1.8
51	28	148.1	1.9	R85	T90S4	1.8
51	28	146.1	1.0	R70	T90S4	1.3
51	28	146.0	0.9	R63	T90S4	1.2
51	56	144.5	1.5	R85	T80B2	1.6
51	56	138.3	1.0	R70	T80B2	1.0
51	56	138.4	0.7	R63	T80B2	0.9
50	28	149.2	1.0	R70	T80D4	1.3
50	28	149.1	0.9	R63	T80D4	1.2
48	59	174.0	3.9	CB110	T80B2	4.2
48	59	171.8	2.1	CB85	T80B2	2.4
48	59	169.6	1.1	CB70	T80B2	1.8
46	20	175.9	2.1	R85	T90L6	2.2
46	20	171.3	1.0	R70	T90L6	1.5
46	20	171.2	0.9	R63	T90L6	1.4
41	69	201.0	3.6	CB110	T80B2	4.2
41	69	198.4	1.9	CB85	T80B2	2.4
41	70	170.4	1.2	R85	T80B2	1.3
41	70	198.8	1.0	CB70	T80B2	1.8
41	70	160.0	0.8	R70	T80B2	0.9

1.7 - Getriebemotoren

n_2 min^{-1}	ir	T2 Nm	FS'		1.1 kW	Ptn kW
40	72	207.0	6.2	CB130	T80B2	5.1
36	40	229.2	6.0	CB130	T90S4	5.1
36	40	211.6	3.0	R110	T90S4	3.0
36	40	202.7	1.5	R85	T90S4	1.6
36	40	196.9	0.8	R70	T90S4	1.2
36	40	196.9	0.7	R63	T90S4	1.1
36	80	212.3	3.1	CB110	T80B2	3.2
36	80	203.5	1.6	CB85	T80B2	1.7
36	80	185.7	1.0	R85	T80B2	1.2
36	80	177.1	0.6	R70	T80B2	0.8
35	40	234.1	5.9	CB130	T80D4	5.1
35	40	207.1	1.5	R85	T80D4	1.6
35	40	201.1	0.8	R70	T80D4	1.2
35	40	201.1	0.7	R63	T80D4	1.1
34	83	208.0	0.8	CB70	T80B2	1.3
34	85	231.8	5.2	CB130	T80B2	4.3
33	43	246.3	3.1	CB110	T90S4	3.8
33	43	243.2	1.7	CB85	T90S4	2.2
33	28	220.6	1.4	R85	T90L6	1.6
33	28	217.4	0.8	R70	T90L6	1.2
33	28	217.5	0.7	R63	T90L6	1.1
33	43	251.7	3.1	CB110	T80D4	3.8
33	43	248.5	1.6	CB85	T80D4	2.2
33	44	245.6	0.8	CB70	T90S4	1.6
32	44	250.8	0.8	CB70	T80D4	1.6
29	49	248.4	2.3	R110	T90S4	2.7
29	49	234.0	1.2	R85	T90S4	1.6
29	50	286.5	5.1	CB130	T90S4	5.1
29	49	239.0	1.2	R85	T80D4	1.6
29	49	235.3	0.7	R70	T80D4	1.1
29	100	217.5	0.8	R85	T80B2	1.1
28	51	292.2	2.6	CB110	T90S4	3.8
28	51	288.4	1.4	CB85	T90S4	2.2
28	51	284.7	0.7	CB70	T90S4	1.6
28	50	292.6	5.0	CB130	T80D4	5.1
27	51	298.5	2.6	CB110	T80D4	3.8
27	51	294.7	1.4	CB85	T80D4	2.2
27	51	291.0	0.7	CB70	T80D4	1.6
26	110	291.9	2.4	CB110	T80B2	3.2
26	110	275.6	1.2	CB85	T80B2	1.7
26	110	271.6	0.7	CB70	T80B2	1.3
26	56	283.9	1.6	R110	T90S4	2.7
26	56	271.4	1.0	R85	T90S4	1.6
25	56	277.5	1.0	R85	T80D4	1.6
25	56	260.6	0.6	R70	T80D4	1.0
25	115	317.9	6.5	CB150	T80B2	5.9
25	115	309.4	4.2	CB130	T80B2	4.2
25	58	328.0	4.4	CB130	T90S4	4.9
24	59	329.4	2.7	CB110	T90S4	3.8
24	59	325.0	1.4	CB85	T90S4	2.2
24	59	320.5	0.7	CB70	T90S4	1.6
24	58	335.1	4.3	CB130	T80D4	4.9
24	59	336.5	2.6	CB110	T80D4	3.8
24	59	331.9	1.4	CB85	T80D4	2.2
24	59	327.5	0.7	CB70	T80D4	1.6
23	40	356.2	6.6	CB150	T90L6	6.7
23	40	351.7	4.4	CB130	T90L6	4.7
23	40	310.6	2.4	R110	T90L6	2.6
23	40	301.5	1.2	R85	T90L6	1.5
23	40	292.3	0.6	R70	T90L6	1.1
22	129	337.6	2.2	CB110	T80B2	3.2
22	129	318.6	1.1	CB85	T80B2	1.7
22	130	316.4	0.6	CB70	T80B2	1.3
21	43	373.0	2.4	CB110	T90L6	3.8
21	43	368.3	1.2	CB85	T90L6	2.2
21	44	372.0	0.6	CB70	T90L6	1.6
21	69	385.4	2.3	CB110	T90S4	3.8
21	69	380.1	1.2	CB85	T90S4	2.2
20	70	329.2	1.5	R110	T90S4	2.3
20	70	313.8	0.8	R85	T90S4	1.3
20	70	380.8	0.6	CB70	T90S4	1.6
20	69	393.5	2.2	CB110	T80D4	3.8
20	69	388.4	1.2	CB85	T80D4	2.2
20	70	320.4	0.8	R85	T80D4	1.3
20	70	388.8	0.6	CB70	T80D4	1.6
20	72	407.3	5.8	CB150	T90S4	6.4
20	72	402.0	3.8	CB130	T90S4	4.7
20	144	392.8	5.6	CB150	T80B2	5.7
20	144	382.2	3.6	CB130	T80B2	4.0
19.4	72	416.1	5.6	CB150	T80D4	6.4

1.7 - Motoriduttori

n_2 min^{-1}	ir	T2 Nm	FS'		1.1 kW	Ptn kW
19.4	72	410.7	3.7	CB130	T80D4	4.7
18.8	49	369.3	1.8	R110	T90L6	2.5
18.8	49	346.6	0.9	R85	T90L6	1.3
18.4	50	439.6	5.6	CB150	T90L6	6.4
18.4	50	439.6	3.7	CB130	T90L6	4.5
18.0	51	430.9	2.3	CB110	T90L6	3.4
18.0	51	425.0	1.2	CB85	T90L6	2.0
17.9	80	405.4	2.0	CB110	T90S4	2.9
17.9	80	364.2	1.3	R110	T90S4	2.2
17.9	80	382.0	1.0	CB85	T90S4	1.5
17.9	80	340.9	0.7	R85	T90S4	1.2
17.6	162	400.2	4.6	CB150	T80B2	4.5
17.6	162	388.2	3.0	CB130	T80B2	3.2
17.5	80	414.2	1.9	CB110	T80D4	2.9
17.5	80	390.2	1.0	CB85	T80D4	1.5
17.5	80	348.0	0.7	R85	T80D4	1.2
17.0	168	408.7	1.6	CB110	T80B2	2.6
17.0	168	384.2	0.9	CB85	T80B2	1.4
16.8	85	455.9	5.0	CB150	T90S4	5.5
16.8	85	449.6	3.2	CB130	T90S4	4.0
16.5	85	465.6	4.9	CB150	T80D4	5.5
16.5	85	459.3	3.1	CB130	T80D4	4.0
16.4	56	409.2	1.3	R110	T90L6	2.3
16.4	56	396.2	0.8	R85	T90L6	1.3
16.4	174	436.1	6.4	CB180	T80B2	6.4
15.9	58	503.4	4.9	CB150	T90L6	6.2
15.9	58	503.4	3.2	CB130	T90L6	4.3
15.6	59	498.6	2.0	CB110	T90L6	3.4
15.6	59	491.9	1.0	CB85	T90L6	2.0
14.8	62	545.1	6.5	CB180	T90L6	8.9
14.3	100	418.9	1.1	R110	T90S4	1.9
14.1	202	491.4	4.0	CB150	T80B2	4.4
14.1	202	476.5	2.6	CB130	T80B2	3.1
13.4	213	510.4	5.5	CB180	T80B2	5.8
13.4	107	574.0	6.1	CB180	T90S4	7.6
13.3	69	583.3	1.7	CB110	T90L6	3.4
13.3	69	575.3	0.9	CB85	T90L6	2.0
13.1	70	479.5	1.1	R110	T90L6	2.1
13.1	70	455.6	0.7	R85	T90L6	1.2
13.1	107	586.3	6.0	CB180	T80D4	7.6
13.0	110	533.4	1.7	CB110	T90S4	2.9
13.0	110	501.2	0.9	CB85	T90S4	1.5
12.8	72	616.5	4.2	CB150	T90L6	5.9
12.8	72	616.6	2.8	CB130	T90L6	4.2
12.7	110	544.5	1.6	CB110	T80D4	2.9
12.7	110	511.4	0.8	CB85	T80D4	1.5
12.7	225	530.8	1.4	CB110	T80B2	2.5
12.7	225	497.7	0.7	CB85	T80B2	1.4
12.4	115	608.5	4.0	CB150	T90S4	5.3
12.4	115	600.0	2.6	CB130	T90S4	3.9
12.3	231	544.8	3.6	CB150	T80B2	4.1
12.3	231	527.8	2.4	CB130	T80B2	3.0
12.3	75	650.7	5.7	CB180	T90L6	8.5
12.2	115	621.5	4.0	CB150	T80D4	5.3
12.2	115	613.0	2.5	CB130	T80D4	3.9
11.5	124	656.0	5.6	CB180	T90S4	7.3
11.5	80	603.1	1.5	CB110	T90L6	2.9
11.5	80	529.6	1.1	R110	T90L6	2.0
11.5	80	566.4	0.8	CB85	T90L6	1.5
11.5	248	585.1	5.0	CB180	T80B2	5.7
11.3	124	669.9	5.4	CB180	T80D4	7.3
11.1	129	625.2	1.4	CB110	T90S4	2.9
11.1	129	587.5	0.7	CB85	T90S4	1.5
10.9	261	606.1	4.7	CB180	T80B2	5.5
10.9	129	638.9	1.4	CB110	T80D4	2.9
10.9	129	600.1	0.7	CB85	T80D4	1.5
10.8	85	699.1	5.3	CB180	T90L6	7.3
10.8	85	699.1	3.6	CB150	T90L6	5.3
10.8	85	679.6	2.4	CB130	T90L6	3.5
10.2	140	668.8	5.6	85/180	T90S4	3.4
10.2	140	658.4	4.0	85/150	T90S4	3.4
10.2	140	627.7	2.6	63/130	T90S4	2.2
10.2	140	638.0	2.6	85/130	T90S4	3.4
10.2	140	638.0	2.6	70/130	T90S4	2.5
10.2	140	617.3	1.6	63/110	T90S4	2.2
10.2	140	627.5	1.6	70/110	T90S4	2.5
10.2	140	627.5	1.6	85/110	T90S4	2.5
10.2	140	617.3	0.8	70/85	T90S4	2.5
10.2	140	617.3	0.8	63/85	T90S4	2.2
10.0	140	640.7	2.6	63/130	T80D4	2.2

1.7 - *Gearmotors*

n_2 min^{-1}	ir	T2 Nm	FS'		1.1 kW	Ptn kW
10.0	140	651.2	2.5	70/130	T80D4	2.5
10.0	140	630.4	1.6	50/110	T80D4	1.5
10.0	140	630.4	1.6	63/110	T80D4	2.2
10.0	140	640.7	1.6	70/110	T80D4	2.5
10.0	140	630.0	0.8	50/85	T80D4	1.5
10.0	140	630.0	0.8	70/85	T80D4	2.5
10.0	140	630.0	0.8	63/85	T80D4	2.2
10.0	286	558.3	0.9	CB110	T80B2	1.9
9.9	144	751.0	3.4	CB150	T90S4	5.1
9.9	144	740.4	2.2	CB130	T90S4	3.7
9.9	288	657.8	3.2	CB150	T80B2	3.9
9.9	288	647.4	2.1	CB130	T80B2	2.9
9.7	144	767.4	3.4	CB150	T80D4	5.1
9.7	144	756.7	2.2	CB130	T80D4	3.7
9.5	150	793.6	4.8	CB180	T90S4	7.3
9.5	300	729.9	6.4	CB215	T80B2	7.4
9.4	304	694.4	4.3	CB180	T80B2	5.4
9.3	150	810.7	4.7	CB180	T80D4	7.3
9.2	100	605.4	0.8	R110	T90L6	1.8
8.8	162	749.6	3.0	CB150	T90S4	4.0
8.8	162	737.8	1.9	CB130	T90S4	3.0
8.8	323	726.5	2.5	CB150	T80B2	3.8
8.8	323	702.7	1.6	CB130	T80B2	2.7
8.6	162	766.1	2.9	CB150	T80D4	4.0
8.6	162	753.8	1.8	CB130	T80D4	3.0
8.6	107	867.4	4.5	CB180	T90L6	7.0
8.5	168	765.1	1.0	CB110	T90S4	2.3
8.4	110	791.4	1.3	CB110	T90L6	2.4
8.4	110	741.6	0.6	CB85	T90L6	1.3
8.3	168	781.7	1.0	CB110	T80D4	2.3
8.3	342	668.2	0.8	CB110	T80B2	1.9
8.2	174	830.6	4.0	CB180	T90S4	5.8
8.1	174	848.2	3.9	CB180	T80D4	5.8
8.0	115	919.2	3.0	CB150	T90L6	4.9
8.0	115	906.0	1.9	CB130	T90L6	3.4
7.7	368	827.8	3.8	CB180	T80B2	5.2
7.6	375	870.9	5.4	CB215	T80B2	6.8
7.4	124	1005	4.0	CB180	T90L6	7.0
7.2	394	755.3	0.7	CB110	T80B2	1.9
7.2	200	910.9	4.5	85/180	T90S4	3.2
7.2	200	896.2	3.2	85/150	T90S4	3.2
7.2	200	866.9	2.1	63/130	T90S4	2.0
7.2	200	866.9	2.1	70/130	T90S4	2.2
7.2	200	881.6	2.0	85/130	T90S4	3.2
7.2	200	866.8	1.2	70/110	T90S4	2.2
7.2	200	866.8	1.2	63/110	T90S4	2.0
7.2	200	881.4	1.1	85/110	T90S4	2.2
7.1	129	928.3	1.1	CB110	T90L6	2.4
7.1	202	920.1	2.5	CB150	T90S4	3.9
7.1	202	904.9	1.6	CB130	T90S4	2.9
7.1	403	891.5	2.1	CB150	T80B2	3.7
7.1	403	862.1	1.3	CB130	T80B2	2.7
7.0	200	885.5	2.0	70/130	T80D4	2.2
7.0	200	885.5	2.0	63/130	T80D4	2.0
7.0	200	870.3	1.1	50/110	T80D4	1.4
7.0	200	885.7	1.1	70/110	T80D4	2.2
7.0	200	885.7	1.1	63/110	T80D4	2.0
6.9	202	940.0	2.5	CB150	T80D4	3.9
6.9	202	924.7	1.6	CB130	T80D4	2.9
6.8	420	943.9	3.3	CB180	T80B2	5.2
6.7	213	1002	5.1	CB215	T90S4	7.0
6.7	213	955	3.5	CB180	T90S4	5.2
6.7	428	962	4.5	CB215	T80B2	6.4
6.6	213	1023	5.0	CB215	T80D4	7.0
6.6	213	975	3.4	CB180	T80D4	5.2
6.6	434	911	2.9	CB180	T80B2	4.7
6.4	144	1151	2.5	CB150	T90L6	4.9
6.4	144	1118	1.6	CB130	T90L6	3.3
6.4	225	975	0.9	CB110	T90S4	2.3
6.3	146	1184	5.8	CB215	T90L6	8.6
6.2	225	996	0.9	CB110	T80D4	2.3
6.2	460	864	0.6	CB110	T80B2	1.9
6.2	231	1018	2.3	CB150	T90S4	3.7
6.2	231	985	1.5	CB130	T90S4	2.7
6.1	150	1200	3.5	CB180	T90L6	6.8
6.1	231	1040	2.3	CB150	T80D4	3.7
6.1	231	1006	1.5	CB130	T80D4	2.7
5.8	248	1147	4.6	CB215	T90S4	6.8
5.8	248	1092	3.2	CB180	T90S4	5.1
5.7	162	1128	2.2	CB150	T90L6	3.8

1.7 - Getriebemotoren

n_2 min^{-1}	ir	T2 Nm	FS'		1.1 kW	Ptn kW
5.7	162	1092	1.4	CB130	T90L6	2.6
5.7	248	1171	4.5	CB215	T80D4	6.8
5.7	248	1116	3.1	CB180	T80D4	5.1
5.7	504	1023	1.7	CB150	T80B2	3.3
5.7	504	1004	1.2	CB130	T80B2	2.4
5.6	508	1067	4.9	CB250	T80B2	8.8
5.5	518	1146	4.0	CB215	T80B2	6.3
5.5	261	1131	3.0	CB180	T90S4	5.0
5.5	168	1074	0.9	CB110	T90L6	2.0
5.4	525	1083	2.6	CB180	T80B2	4.6
5.4	267	1196	4.3	CB215	T90S4	6.4
5.4	261	1157	2.9	CB180	T80D4	5.0
5.3	174	1251	4.9	CB215	T90L6	6.8
5.3	174	1251	2.9	CB180	T90L6	5.5
5.2	267	1223	4.2	CB215	T80D4	6.4
5.1	280	1131	3.3	85/180	T90S4	3.2
5.1	280	1090	2.3	85/150	T90S4	3.2
5.1	280	1048	1.5	63/130	T90S4	2.0
5.1	280	1048	1.5	85/130	T90S4	3.2
5.1	280	1048	1.5	70/130	T90S4	2.2
5.1	280	1049	1.0	85/110	T90S4	2.2
5.1	280	1049	1.0	70/110	T90S4	2.2
5.1	280	1049	1.0	63/110	T90S4	2.0
5.0	280	1071	1.5	70/130	T80D4	2.2
5.0	280	1071	1.5	63/130	T80D4	2.0
5.0	280	1051	1.0	50/110	T80D4	1.4
5.0	280	1071	0.9	70/110	T80D4	2.2
5.0	280	1071	0.9	63/110	T80D4	2.0
5.0	573	1163	4.9	CB250	T80B2	8.4
5.0	288	1247	2.0	CB150	T90S4	3.6
5.0	288	1205	1.3	CB130	T90S4	2.6
5.0	576	1125	1.4	CB150	T80B2	3.2
5.0	576	1104	1.0	CB130	T80B2	2.3
4.9	290	1321	6.5	CB250	T90S4	11
4.9	288	1275	1.9	CB150	T80D4	3.6
4.9	288	1232	1.3	CB130	T80D4	2.6
4.8	290	1348	6.3	CB250	T80D4	11
4.8	300	1365	4.0	CB215	T90S4	6.6
4.8	600	1172	3.5	CB215	T80B2	5.3
4.8	600	1194	2.2	CB180	T80B2	4.4
4.7	304	1297	2.7	CB180	T90S4	4.9
4.7	300	1395	4.0	CB215	T80D4	6.6
4.6	304	1322	2.7	CB180	T80D4	4.9
4.6	202	1385	1.9	CB150	T90L6	3.7
4.6	202	1339	1.2	CB130	T90L6	2.5
4.4	207	1491	6.1	CB250	T90L6	11
4.4	323	1376	1.5	CB150	T90S4	3.5
4.4	323	1328	1.0	CB130	T90S4	2.5
4.3	323	1407	1.5	CB150	T80D4	3.5
4.3	323	1358	1.0	CB130	T80D4	2.5
4.3	213	1508	3.7	CB215	T90L6	6.6
4.3	213	1435	2.6	CB180	T90L6	5.0
4.1	225	1439	0.7	CB110	T90L6	2.0
4.0	710	1441	3.9	CB250	T80B2	8.4
4.0	231	1531	1.7	CB150	T90L6	3.5
4.0	231	1478	1.1	CB130	T90L6	2.4
4.0	360	1614	5.5	CB250	T90S4	9.7
4.0	720	1327	1.1	CB150	T80B2	3.0
4.0	720	1274	0.8	CB130	T80B2	2.2
3.9	360	1647	5.4	CB250	T80D4	9.7
3.9	368	1539	2.4	CB180	T90S4	4.7
3.8	240	1728	5.4	CB250	T90L6	10
3.8	375	1627	3.4	CB215	T90S4	6.1
3.8	750	1465	2.7	CB215	T80B2	5.3
3.8	368	1576	2.3	CB180	T80D4	4.7
3.8	750	1382	1.7	CB180	T80B2	4.1
3.7	375	1662	3.3	CB215	T80D4	6.1
3.7	248	1727	3.4	CB215	T90L6	6.4
3.7	248	1642	2.3	CB180	T90L6	4.9
3.6	400	1644	2.7	85/180	T90S4	2.4
3.6	400	1614	1.8	85/150	T90S4	2.4
3.6	400	1497	1.2	63/130	T90S4	1.5
3.6	400	1555	1.2	70/130	T90S4	1.7
3.6	400	1614	1.1	85/130	T90S4	2.4
3.6	400	1526	0.7	63/110	T90S4	1.5
3.6	400	1526	0.7	70/110	T90S4	1.7
3.6	400	1585	0.6	85/110	T90S4	1.7
3.6	403	1658	1.3	CB150	T90S4	3.4
3.6	403	1598	0.9	CB130	T90S4	2.4
3.5	261	1701	2.2	CB180	T90L6	4.7

1.7 - Motoriduttori

n_2 min^{-1}	ir	T2 Nm	FS'		1.1 kW	Ptn kW
3.5	400	1530	1.2	63/130	T80D4	1.5
3.5	400	1590	1.1	70/130	T80D4	1.7
3.5	400	1560	0.6	70/110	T80D4	1.7
3.5	400	1560	0.6	50/110	T80D4	1.0
3.5	400	1560	0.6	63/110	T80D4	1.5
3.5	403	1696	1.3	CB150	T80D4	3.4
3.5	403	1635	0.8	CB130	T80D4	2.4
3.5	267	1766	3.2	CB215	T90L6	6.0
3.4	420	1761	2.1	CB180	T90S4	4.7
3.3	428	1793	2.8	CB215	T90S4	5.8
3.3	420	1798	2.0	CB180	T80D4	4.7
3.3	435	1884	4.3	CB250	T90S4	9.2
3.3	434	1692	1.9	CB180	T90S4	4.3
3.3	428	1831	2.8	CB215	T80D4	5.8
3.2	434	1724	1.8	CB180	T80D4	4.3
3.2	435	1925	4.2	CB250	T80D4	9.2
3.2	288	1877	1.4	CB150	T90L6	3.4
3.2	288	1811	0.9	CB130	T90L6	2.3
3.2	290	1988	4.7	CB250	T90L6	10
3.1	300	2053	2.9	CB215	T90L6	6.3
3.0	304	1941	2.0	CB180	T90L6	4.6
2.9	323	2027	1.1	CB150	T90L6	3.3
2.9	323	1953	0.7	CB130	T90L6	2.2
2.8	504	1887	1.1	CB150	T90S4	3.0
2.8	504	1850	0.7	CB130	T90S4	2.2
2.8	508	1982	3.1	CB250	T90S4	8.1
2.8	504	1927	1.0	CB150	T80D4	3.0
2.8	504	1890	0.7	CB130	T80D4	2.2
2.8	508	2017	3.1	CB250	T80D4	8.1
2.8	518	2131	2.5	CB215	T90S4	5.7
2.7	525	2008	1.6	CB180	T90S4	4.3
2.7	518	2179	2.4	CB215	T80D4	5.7
2.7	525	2046	1.6	CB180	T80D4	4.3
2.6	360	2421	4.0	CB250	T90L6	9.2
2.5	573	2143	3.1	CB250	T90S4	7.7
2.5	368	2311	1.7	CB180	T90L6	4.5
2.5	576	2118	0.9	CB150	T90S4	3.0
2.5	576	2075	0.6	CB130	T90S4	2.2
2.5	375	2444	2.5	CB215	T90L6	5.8
2.4	573	2196	3.0	CB250	T80D4	7.7
2.4	576	2162	0.9	CB150	T80D4	3.0
2.4	576	2119	0.6	CB130	T80D4	2.2
2.4	600	2163	2.2	CB215	T90S4	4.9
2.4	600	2030	2.0	85/180	T90S4	2.7
2.4	600	1986	1.5	85/150	T90S4	2.7
2.4	600	2252	1.4	CB180	T90S4	4.2
2.4	600	1898	0.9	63/130	T90S4	1.7
2.4	600	1898	0.9	70/130	T90S4	1.9
2.4	600	1941	0.9	85/130	T90S4	2.7
2.3	600	2209	2.2	CB215	T80D4	4.9
2.3	600	2300	1.3	CB180	T80D4	4.2
2.3	600	1939	0.9	70/130	T80D4	1.9
2.3	600	1939	0.9	63/130	T80D4	1.7
2.3	403	2488	1.0	CB150	T90L6	3.2
2.3	403	2396	0.6	CB130	T90L6	2.2
2.2	420	2639	1.5	CB180	T90L6	4.5
2.2	428	2639	2.1	CB215	T90L6	5.4
2.1	434	2526	1.4	CB180	T90L6	4.2
2.1	435	2838	3.1	CB250	T90L6	8.8
2.0	710	2665	2.5	CB250	T90S4	7.7
2.0	720	2427	0.7	CB150	T90S4	2.7
2.0	710	2720	2.4	CB250	T80D4	7.7
1.9	720	2492	0.7	CB150	T80D4	2.7
1.9	750	2695	1.7	CB215	T90S4	4.9
1.9	750	2529	1.1	CB180	T90S4	3.8
1.9	750	2753	1.6	CB215	T80D4	4.9
1.9	750	2584	1.0	CB180	T80D4	3.8
1.8	504	2812	0.8	CB150	T90L6	2.9
1.8	508	2960	2.3	CB250	T90L6	7.7
1.8	518	3127	1.8	CB215	T90L6	5.3
1.8	525	3001	1.2	CB180	T90L6	4.1
1.6	573	3197	2.3	CB250	T90L6	7.4
1.6	576	3084	0.7	CB150	T90L6	2.8
1.5	600	3227	1.6	CB215	T90L6	4.7
1.5	600	3296	1.0	CB180	T90L6	3.9
1.5	956	3362	2.1	110/215	T90S4	2.7
1.5	980	3382	1.4	110/180	T90S4	2.7
1.5	980	3165	1.2	85/180	T90S4	1.6
1.5	980	3165	0.9	85/150	T90S4	1.6
1.5	980	3383	0.9	110/150	T90S4	2.7

1.7 - *Gearmotors*

n_2 min^{-1}	ir	T2 Nm	FS'		1.1 kW	Ptn kW
1.4	980	3233	1.2	85/180	T80D4	1.6
1.4	980	3232	0.9	85/150	T80D4	1.6
1.3	710	3797	1.9	CB250	T90L6	7.2
1.2	750	4013	1.2	CB215	T90L6	4.7
1.2	750	3757	0.8	CB180	T90L6	3.6
1.0	1372	4748	1.5	110/215	T90S4	2.7
1.0	1372	3839	1.2	85/180	T90S4	1.6
1.0	1372	4042	1.1	110/180	T90S4	2.7
1.0	1372	3735	0.8	85/150	T90S4	1.6
1.0	1372	3938	0.7	110/150	T90S4	2.7
1.0	1372	3913	1.2	85/180	T80D4	1.6
1.0	1372	3811	0.8	85/150	T80D4	1.6
0.73	1960	5613	1.3	110/215	T90S4	2.7
0.73	1960	4894	0.9	85/180	T90S4	1.6
0.73	1960	5179	0.9	110/180	T90S4	2.7
0.71	1960	5030	0.9	85/180	T80D4	1.6
0.51	2800	7207	1.0	110/215	T90S4	2.3
0.51	2800	6389	0.7	85/180	T90S4	1.3
0.51	2800	6589	0.7	110/180	T90S4	2.3
0.50	2800	6512	0.7	85/180	T80D4	1.3
0.36	4000	9041	0.8	110/215	T90S4	1.9
0.25	5700	11347	0.6	110/215	T90S4	1.9

1.7 - Getriebemotoren

n_2 min^{-1}	ir	T2 Nm	FS'		1.5 kW	Ptn kW
574	5	22	3.6	R63	T80C2	2.5
574	5	21.7	2.1	R50	T80C2	1.7
411	7	29.9	5.9	R85	T90S2	3.4
411	7	29.9	3.2	R70	T90S2	2.5
411	7	29.9	2.8	R63	T90S2	2.2
410	7	30.1	3.2	R70	T80C2	2.5
410	7	30.1	2.8	R63	T80C2	2.2
410	7	29.7	1.7	R50	T80C2	1.5
288	10	42.3	4.8	R85	T90S2	3.2
288	10	41.8	2.5	R70	T90S2	2.2
288	10	41.8	2.2	R63	T90S2	2.0
287	10	41.9	2.5	R70	T80C2	2.2
287	10	41.9	2.2	R63	T80C2	2.0
287	10	41.9	1.3	R50	T80C2	1.4
286	5	43.1	2.6	R63	T90L4	2.5
204	7	59.6	4.1	R85	T90L4	3.4
204	7	59.6	2.2	R70	T90L4	2.5
204	7	58.9	2.0	R63	T90L4	2.2
192	15	61.2	3.4	R85	T90S2	2.7
192	15	61.2	1.8	R70	T90S2	1.9
192	15	61.2	1.6	R63	T90S2	1.7
191	15	61.4	1.8	R70	T80C2	1.9
191	15	61.4	1.6	R63	T80C2	1.7
191	15	61.4	0.9	R50	T80C2	1.2
144	20	80.6	2.9	R85	T90S2	2.4
144	20	79.6	1.4	R70	T90S2	1.7
144	20	79.6	1.3	R63	T90S2	1.5
144	20	79.9	1.4	R70	T80C2	1.7
144	20	79.9	1.3	R63	T80C2	1.5
144	20	78.9	0.7	R50	T80C2	1.0
143	10	84.2	3.3	R85	T90L4	3.2
143	10	83.1	1.7	R70	T90L4	2.2
143	10	83.2	1.5	R63	T90L4	2.0
134	7	90.7	6.4	R110	T100A6	5.6
134	7	89.6	3.3	R85	T90LB6	3.2
134	7	89.6	3.3	R85	T100A6	3.2
134	7	89.6	1.8	R70	T100A6	2.4
134	7	89.6	1.8	R70	T90LB6	2.4
134	7	89.6	1.5	R63	T90LB6	2.2
103	28	104.4	2.0	R85	T90S2	1.8
103	28	103.0	1.1	R70	T90S2	1.3
103	28	104.4	1.0	R63	T90S2	1.2
103	28	103.4	1.1	R70	T80C2	1.3
103	28	104.8	1.0	R63	T80C2	1.2
95	15	121.7	2.3	R85	T90L4	2.7
95	15	120.2	1.2	R70	T90L4	1.9
95	15	120.2	1.1	R63	T90L4	1.7
94	10	128.0	5.0	R110	T100A6	5.2
94	10	126.5	2.6	R85	T90LB6	3.0
94	10	126.5	2.6	R85	T100A6	3.0
94	10	124.9	1.3	R70	T100A6	2.1
94	10	124.9	1.3	R70	T90LB6	2.1
94	10	123.4	1.2	R63	T90LB6	1.8
72	40	147.2	3.3	R110	T90S2	3.0
72	40	143.3	1.7	R85	T90S2	1.6
72	40	141.3	0.9	R70	T90S2	1.2
72	40	141.2	0.8	R63	T90S2	1.1
72	40	143.8	1.7	R85	T80C2	1.6
72	40	141.8	0.9	R70	T80C2	1.2
72	40	141.7	0.8	R63	T80C2	1.1
72	20	158.3	2.0	R85	T90L4	2.4
72	20	154.3	1.0	R70	T90L4	1.7
72	20	154.3	0.9	R63	T90L4	1.5
67	43	171.1	3.7	CB110	T90S2	4.2
67	43	169.0	2.0	CB85	T90S2	2.4
67	43	171.7	3.7	CB110	T80C2	4.2
67	43	169.6	2.0	CB85	T80C2	2.4
65	44	170.7	1.0	CB70	T90S2	1.8
65	44	171.3	1.0	CB70	T80C2	1.8
63	15	189.7	5.2	R130	T100A6	6.4
63	15	182.9	3.5	R110	T100A6	4.2
63	15	180.6	1.8	R85	T90LB6	2.4
63	15	180.6	1.8	R85	T100A6	2.4
63	15	178.3	1.0	R70	T100A6	1.7
63	15	178.3	1.0	R70	T90LB6	1.7
63	15	178.3	0.9	R63	T90LB6	1.6
59	49	175.5	2.6	R110	T90S2	2.7
59	49	170.6	1.3	R85	T90S2	1.6
59	49	171.2	1.3	R85	T80C2	1.6
59	49	166.2	0.8	R70	T80C2	1.1
58	50	196.5	6.1	CB130	T90S2	5.3
57	50	197.2	6.1	CB130	T80C2	5.3
56	51	203.0	3.1	CB110	T90S2	4.2

1.7 - Motoriduttori

n_2 min^{-1}	ir	T2 Nm	FS'		1.5 kW	Ptn kW
56	51	200.4	1.7	CB85	T90S2	2.4
56	51	197.8	0.9	CB70	T90S2	1.8
56	51	203.7	3.1	CB110	T80C2	4.2
56	51	201.1	1.7	CB85	T80C2	2.4
56	51	198.6	0.9	CB70	T80C2	1.8
51	56	197.8	1.8	R110	T90S2	2.7
51	56	194.9	1.1	R85	T90S2	1.6
51	56	195.6	1.1	R85	T80C2	1.6
51	56	187.3	0.7	R70	T80C2	1.0
51	28	201.9	1.4	R85	T90L4	1.8
51	28	199.2	0.7	R70	T90L4	1.3
51	28	199.1	0.7	R63	T90L4	1.2
50	58	227.9	5.2	CB130	T90S2	5.3
49	58	228.7	5.2	CB130	T80C2	5.3
49	59	234.8	2.9	CB110	T90S2	4.2
49	59	231.9	1.5	CB85	T90S2	2.4
49	59	228.9	0.8	CB70	T90S2	1.8
49	59	235.6	2.9	CB110	T80C2	4.2
49	59	232.7	1.5	CB85	T80C2	2.4
49	59	229.7	0.8	CB70	T80C2	1.8
47	20	249.9	4.3	R130	T100A6	6.0
47	20	240.8	3.0	R110	T100A6	4.0
47	20	234.7	1.5	R85	T90LB6	2.2
47	20	234.7	1.5	R85	T100A6	2.2
47	20	228.7	0.8	R70	T90LB6	1.5
47	20	228.5	0.7	R63	T90LB6	1.4
42	69	271.2	2.7	CB110	T90S2	4.2
42	69	267.7	1.4	CB85	T90S2	2.4
42	69	272.1	2.7	CB110	T80C2	4.2
42	69	268.7	1.4	CB85	T80C2	2.4
41	70	236.7	1.6	R110	T90S2	2.3
41	70	229.7	0.9	R85	T90S2	1.3
41	70	268.1	0.7	CB70	T90S2	1.8
41	70	230.6	0.9	R85	T80C2	1.3
41	70	269.1	0.7	CB70	T80C2	1.8
40	72	279.3	4.6	CB130	T90S2	5.1
40	72	280.3	4.6	CB130	T80C2	5.1
36	80	286.5	2.3	CB110	T90S2	3.2
36	80	262.6	1.5	R110	T90S2	2.2
36	80	274.5	1.2	CB85	T90S2	1.7
36	80	250.6	0.8	R85	T90S2	1.2
36	80	287.5	2.3	CB110	T80C2	3.2
36	80	275.5	1.2	CB85	T80C2	1.7
36	80	251.5	0.8	R85	T80C2	1.2
36	40	312.5	4.4	CB130	T90L4	5.1
36	40	288.5	2.2	R110	T90L4	3.0
36	40	276.4	1.1	R85	T90L4	1.6
36	40	268.5	0.6	R70	T90L4	1.2
35	83	280.8	0.6	CB70	T90S2	1.3
35	83	281.8	0.6	CB70	T80C2	1.3
34	85	321.3	5.9	CB150	T90S2	6.2
34	85	312.9	3.8	CB130	T90S2	4.3
34	85	322.5	5.9	CB150	T80C2	6.2
34	85	314.0	3.8	CB130	T80C2	4.3
34	28	315.8	4.8	R150	T100A6	5.7
34	28	320.1	2.9	R130	T100A6	4.3
34	28	307.2	2.2	R110	T100A6	3.0
34	28	294.5	1.1	R85	T90LB6	1.6
34	28	294.5	1.1	R85	T100A6	1.6
33	43	335.9	2.3	CB110	T90L4	3.8
33	43	331.6	1.2	CB85	T90L4	2.2
33	44	335.0	0.6	CB70	T90L4	1.6
29	49	338.7	1.7	R110	T90L4	2.7
29	49	319.1	0.9	R85	T90L4	1.6
29	100	308.3	1.2	R110	T90S2	1.9
29	50	390.7	5.7	CB150	T90L4	6.7
29	50	390.7	3.7	CB130	T90L4	5.1
28	51	398.4	1.9	CB110	T90L4	3.8
28	51	393.3	1.0	CB85	T90L4	2.2
26	110	394.0	1.8	CB110	T90S2	3.2
26	110	372.0	0.9	CB85	T90S2	1.7
26	110	395.3	1.8	CB110	T80C2	3.2
26	110	373.3	0.9	CB85	T80C2	1.7
26	56	387.1	1.2	R110	T90L4	2.7
26	56	370.1	0.8	R85	T90L4	1.6
25	115	429.0	4.8	CB150	T90S2	5.9
25	115	417.7	3.1	CB130	T90S2	4.2
25	115	430.4	4.8	CB150	T80C2	5.9
25	115	419.0	3.1	CB130	T80C2	4.2
25	58	447.3	4.9	CB150	T90L4	6.4

1.7 - *Gearmotors*

n_2 min^{-1}	ir	T2 Nm	FS'		1.5 kW	Ptn kW
25	58	447.3	3.3	CB130	T90L4	4.9
24	59	449.1	2.0	CB110	T90L4	3.8
24	59	443.1	1.0	CB85	T90L4	2.2
24	40	475.5	4.9	CB150	T100A6	6.7
24	40	475.5	4.9	CB150	T90LB6	6.7
24	40	444.9	3.7	R150	T100A6	5.5
24	40	469.4	3.3	CB130	T100A6	4.7
24	40	469.4	3.3	CB130	T90LB6	4.7
24	40	432.8	2.4	R130	T100A6	3.7
24	40	414.5	1.8	R110	T90LB6	2.6
24	40	414.5	1.8	R110	T100A6	2.6
24	40	402.5	0.9	R85	T90LB6	1.5
24	40	402.5	0.9	R85	T100A6	1.5
23	124	462.5	6.6	CB180	T90S2	8.2
23	124	464.1	6.5	CB180	T80C2	8.2
23	62	484.5	6.6	CB180	T90L4	9.3
22	129	455.5	1.6	CB110	T90S2	3.2
22	129	429.9	0.8	CB85	T90S2	1.7
22	129	457.2	1.6	CB110	T80C2	3.2
22	129	431.3	0.8	CB85	T80C2	1.7
22	43	498.1	1.8	CB110	T100A6	3.8
22	43	498.1	1.8	CB110	T90LB6	3.8
22	43	491.3	0.9	CB85	T90LB6	2.2
21	69	525.5	1.7	CB110	T90L4	3.8
21	69	518.3	0.9	CB85	T90L4	2.2
20	70	448.9	1.1	R110	T90L4	2.3
20	70	427.9	0.6	R85	T90L4	1.3
20	144	530.0	4.1	CB150	T90S2	5.7
20	144	515.8	2.7	CB130	T90S2	4.0
20	144	531.9	4.1	CB150	T80C2	5.7
20	144	517.6	2.7	CB130	T80C2	4.0
20	72	555.4	4.2	CB150	T90L4	6.4
20	72	548.2	2.8	CB130	T90L4	4.7
19.2	150	552.1	5.8	CB180	T90S2	7.9
19.2	49	515.4	3.0	R150	T100A6	4.8
19.2	49	515.4	2.0	R130	T100A6	3.5
19.2	49	492.9	1.4	R110	T90LB6	2.5
19.2	49	492.9	1.4	R110	T100A6	2.5
19.2	49	462.9	0.7	R85	T90LB6	1.3
19.1	150	554.2	5.8	CB180	T80C2	7.9
19.1	75	578.4	5.8	CB180	T90L4	8.9
18.8	50	586.7	4.2	CB150	T100A6	6.4
18.8	50	586.7	4.2	CB150	T90LB6	6.4
18.8	50	586.7	2.8	CB130	T100A6	4.5
18.8	50	586.7	2.8	CB130	T90LB6	4.5
18.4	51	575.1	1.7	CB110	T90LB6	3.4
18.4	51	575.1	1.7	CB110	T100A6	3.4
18.4	51	567.3	0.9	CB85	T90LB6	2.0
18.1	52	618.0	5.9	CB180	T100A6	9.3
18.1	52	618.0	5.9	CB180	T90LB6	9.3
17.9	80	552.8	1.4	CB110	T90L4	2.9
17.9	80	496.6	1.0	R110	T90L4	2.2
17.9	80	521.0	0.7	CB85	T90L4	1.5
17.8	162	539.8	3.4	CB150	T90S2	4.5
17.8	162	523.7	2.2	CB130	T90S2	3.2
17.7	162	541.6	3.4	CB150	T80C2	4.5
17.7	162	525.4	2.2	CB130	T80C2	3.2
17.1	168	551.5	1.2	CB110	T90S2	2.6
17.1	168	518.4	0.6	CB85	T90S2	1.4
17.1	168	553.7	1.2	CB110	T80C2	2.6
17.1	168	520.0	0.6	CB85	T80C2	1.4
16.8	85	630.2	5.3	CB180	T90L4	7.9
16.8	85	621.7	3.7	CB150	T90L4	5.5
16.8	85	613.2	2.4	CB130	T90L4	4.0
16.8	56	580.2	2.6	R150	T100A6	4.7
16.8	56	580.3	1.6	R130	T100A6	3.4
16.8	56	546.2	1.0	R110	T90LB6	2.3
16.8	56	546.2	1.0	R110	T100A6	2.3
16.8	56	529.0	0.6	R85	T90LB6	1.3
16.6	174	588.6	4.7	CB180	T90S2	6.4
16.5	174	590.7	4.7	CB180	T80C2	6.4
16.2	58	671.6	3.7	CB150	T90LB6	6.2
16.2	58	671.6	3.7	CB150	T100A6	6.2
16.2	58	671.7	2.4	CB130	T100A6	4.3
16.2	58	671.7	2.4	CB130	T90LB6	4.3
15.9	59	665.3	1.5	CB110	T100A6	3.4
15.9	59	665.3	1.5	CB110	T90LB6	3.4
15.9	59	656.2	0.8	CB85	T90LB6	2.0
15.2	62	727.6	4.9	CB180	T100A6	8.9
15.2	62	727.6	4.9	CB180	T90LB6	8.9

1.7 - Getriebemotoren

n_2 min^{-1}	ir	T2 Nm	FS'		1.5 kW	Ptn kW
14.3	100	571.2	0.8	R110	T90L4	1.9
14.3	202	663.0	3.0	CB150	T90S2	4.4
14.3	202	642.9	1.9	CB130	T90S2	3.1
14.2	202	665.3	3.0	CB150	T80C2	4.4
14.2	202	645.2	1.9	CB130	T80C2	3.1
13.6	69	778.3	1.3	CB110	T100A6	3.4
13.6	69	778.3	1.3	CB110	T90LB6	3.4
13.6	69	767.7	0.7	CB85	T90LB6	2.0
13.5	213	720.5	5.9	CB215	T90S2	7.8
13.5	213	688.7	4.0	CB180	T90S2	5.8
13.5	213	723.1	5.9	CB215	T80C2	7.8
13.5	213	691.2	4.0	CB180	T80C2	5.8
13.4	70	671.9	2.0	R150	T100A6	4.0
13.4	70	661.3	1.4	R130	T100A6	2.9
13.4	70	640.2	0.9	R110	T100A6	2.1
13.4	70	640.2	0.9	R110	T90LB6	2.1
13.4	107	782.8	4.5	CB180	T90L4	7.6
13.1	72	822.6	3.2	CB150	T90LB6	5.9
13.1	72	822.6	3.2	CB150	T100A6	5.9
13.1	72	822.7	2.1	CB130	T100A6	4.2
13.1	72	822.7	2.1	CB130	T90LB6	4.2
13.0	110	727.3	1.2	CB110	T90L4	2.9
13.0	110	683.4	0.6	CB85	T90L4	1.5
12.8	225	716.3	1.0	CB110	T90S2	2.5
12.8	225	718.6	1.0	CB110	T80C2	2.5
12.5	75	868.9	4.3	CB180	T100A6	8.5
12.5	75	868.9	4.3	CB180	T90LB6	8.5
12.5	231	735.1	2.7	CB150	T90S2	4.1
12.5	231	712.2	1.8	CB130	T90S2	3.0
12.4	115	829.7	3.0	CB150	T90L4	5.3
12.4	115	818.2	1.9	CB130	T90L4	3.9
12.4	231	738.3	2.7	CB150	T80C2	4.1
12.4	231	715.1	1.8	CB130	T80C2	3.0
11.8	80	755.8	1.7	R150	T100A6	3.9
11.8	80	731.4	1.2	R130	T100A6	2.7
11.8	80	804.7	1.1	CB110	T90LB6	2.9
11.8	80	804.7	1.1	CB110	T100A6	2.9
11.8	80	707.0	0.8	R110	T90LB6	2.0
11.8	80	707.0	0.8	R110	T100A6	2.0
11.6	248	826.7	5.4	CB215	T90S2	7.6
11.6	248	789.6	3.7	CB180	T90S2	5.7
11.6	248	829.5	5.4	CB215	T80C2	7.6
11.6	248	792.3	3.7	CB180	T80C2	5.7
11.5	124	894.5	4.1	CB180	T90L4	7.3
11.1	129	852.5	1.1	CB110	T90L4	2.9
11.1	85	932.6	4.0	CB180	T90LB6	7.3
11.1	85	932.6	4.0	CB180	T100A6	7.3
11.1	85	932.6	2.7	CB150	T100A6	5.3
11.1	85	932.6	2.7	CB150	T90LB6	5.3
11.1	85	906.8	1.8	CB130	T90LB6	3.5
11.1	85	906.8	1.8	CB130	T100A6	3.5
11.0	261	818.2	3.5	CB180	T90S2	5.5
11.0	261	820.5	3.5	CB180	T80C2	5.5
10.8	267	863.0	5.0	CB215	T90S2	7.2
10.8	267	866.2	4.9	CB215	T80C2	7.2
10.2	140	912.0	4.1	85/180	T90L4	3.4
10.2	140	897.9	2.9	85/150	T90L4	3.4
10.2	140	856.0	1.9	63/130	T90L4	2.2
10.2	140	870.0	1.9	85/130	T90L4	3.4
10.2	140	870.0	1.9	70/130	T90L4	2.5
10.2	140	841.8	1.2	63/110	T90L4	2.2
10.2	140	855.7	1.2	85/110	T90L4	2.5
10.2	140	855.7	1.2	70/110	T90L4	2.5
10.1	286	753.7	0.7	CB110	T90S2	1.9
10.0	286	756.8	0.7	CB110	T80C2	1.9
10.0	288	888.2	2.4	CB150	T90S2	3.9
10.0	288	874.0	1.5	CB130	T90S2	2.9
10.0	288	890.9	2.4	CB150	T80C2	3.9
10.0	288	876.6	1.5	CB130	T80C2	2.9
9.9	144	1024	2.5	CB150	T90L4	5.1
9.9	144	1010	1.6	CB130	T90L4	3.7
9.8	146	1068	5.8	CB215	T90L4	9.3
9.6	300	985	4.8	CB215	T90S2	7.4
9.6	300	988	4.7	CB215	T80C2	7.4
9.5	150	1082	3.5	CB180	T90L4	7.3
9.5	304	938	3.2	CB180	T90S2	5.4
9.4	304	941	3.2	CB180	T80C2	5.4
9.4	100	884	1.3	R150	T100A6	3.5
9.4	100	838	0.9	R130	T100A6	2.4
9.4	100	808	0.6	R110	T100A6	1.8

1.7 - Motoriduttori

n_2 min^{-1}	ir	T2 Nm	FS'		1.5 kW	Ptn kW
9.4	100	808	0.6	R110	T90LB6	1.8
8.9	323	980	1.8	CB150	T90S2	3.8
8.9	323	948	1.2	CB130	T90S2	2.7
8.9	323	983	1.8	CB150	T80C2	3.8
8.9	323	951	1.2	CB130	T80C2	2.7
8.8	162	1022	2.2	CB150	T90L4	4.0
8.8	162	1006	1.4	CB130	T90L4	3.0
8.8	107	1157	3.4	CB180	T100A6	7.0
8.8	107	1157	3.4	CB180	T90LB6	7.0
8.6	110	1056	0.9	CB110	T100A6	2.4
8.6	110	1056	0.9	CB110	T90LB6	2.4
8.5	168	1043	0.8	CB110	T90L4	2.3
8.4	112	1264	5.7	CB215	T100A6	9.6
8.4	112	1264	5.7	CB215	T90LB6	9.6
8.2	174	1098	5.1	CB215	T90L4	6.8
8.2	174	1133	2.9	CB180	T90L4	5.8
8.2	115	1227	2.2	CB150	T100A6	4.9
8.2	115	1227	2.2	CB150	T90LB6	4.9
8.2	115	1210	1.4	CB130	T90LB6	3.4
8.2	115	1210	1.4	CB130	T100A6	3.4
8.0	360	1146	6.6	CB250	T90S2	11
8.0	360	1150	6.6	CB250	T80C2	11
7.8	368	1116	2.8	CB180	T90S2	5.2
7.8	368	1120	2.8	CB180	T80C2	5.2
7.8	121	1327	5.0	CB215	T100A6	8.9
7.8	121	1327	5.0	CB215	T90LB6	8.9
7.7	375	1175	4.0	CB215	T90S2	6.8
7.7	375	1180	4.0	CB215	T80C2	6.8
7.6	124	1342	3.0	CB180	T100A6	7.0
7.6	124	1342	3.0	CB180	T90LB6	7.0
7.3	129	1238	0.8	CB110	T90LB6	2.4
7.3	129	1238	0.8	CB110	T100A6	2.4
7.2	200	1242	3.3	85/180	T90L4	3.2
7.2	200	1222	2.3	85/150	T90L4	3.2
7.2	403	1202	1.6	CB150	T90S2	3.7
7.2	200	1182	1.5	70/130	T90L4	2.2
7.2	200	1182	1.5	63/130	T90L4	2.0
7.2	200	1202	1.5	85/130	T90L4	3.2
7.2	403	1162	1.0	CB130	T90S2	2.7
7.2	200	1182	0.8	63/110	T90L4	2.0
7.2	200	1182	0.8	70/110	T90L4	2.2
7.2	200	1202	0.8	85/110	T90L4	2.2
7.1	403	1207	1.6	CB150	T80C2	3.7
7.1	403	1167	1.0	CB130	T80C2	2.7
7.1	202	1255	1.9	CB150	T90L4	3.9
7.1	202	1234	1.2	CB130	T90L4	2.9
6.9	207	1348	6.1	CB250	T90L4	11
6.9	420	1274	2.4	CB180	T90S2	5.2
6.8	420	1279	2.4	CB180	T80C2	5.2
6.7	428	1299	3.3	CB215	T90S2	6.4
6.7	213	1366	3.7	CB215	T90L4	7.0
6.7	428	1302	3.3	CB215	T80C2	6.4
6.7	213	1302	2.6	CB180	T90L4	5.2
6.6	434	1230	2.2	CB180	T90S2	4.7
6.6	435	1363	5.1	CB250	T90S2	10
6.6	434	1235	2.2	CB180	T80C2	4.7
6.6	435	1368	5.1	CB250	T80C2	10
6.5	144	1536	1.9	CB150	T90LB6	4.9
6.5	144	1536	1.9	CB150	T100A6	4.9
6.5	144	1492	1.2	CB130	T100A6	3.3
6.5	144	1492	1.2	CB130	T90LB6	3.3
6.5	145	1592	6.3	CB250	T100A6	14
6.5	145	1592	6.3	CB250	T90LB6	14
6.4	146	1579	4.3	CB215	T90LB6	8.6
6.4	146	1579	4.3	CB215	T100A6	8.6
6.4	225	1330	0.7	CB110	T90L4	2.3
6.3	150	1599	2.6	CB180	T100A6	6.8
6.3	150	1599	2.6	CB180	T90LB6	6.8
6.2	231	1389	1.7	CB150	T90L4	3.7
6.2	231	1343	1.1	CB130	T90L4	2.7
6.0	240	1538	5.5	CB250	T90L4	11
5.8	162	1507	1.6	CB150	T90LB6	3.8
5.8	162	1507	1.6	CB150	T100A6	3.8
5.8	162	1457	1.1	CB130	T100A6	2.6
5.8	162	1457	1.1	CB130	T90LB6	2.6
5.8	248	1564	3.4	CB215	T90L4	6.8
5.8	248	1490	2.3	CB180	T90L4	5.1
5.7	504	1379	1.2	CB150	T90S2	3.3
5.7	504	1355	0.9	CB130	T90S2	2.4
5.7	504	1385	1.2	CB150	T80C2	3.3

1.7 - *Gearmotors*

n_2 min^{-1}	ir	T2 Nm	FS'		1.5 kW	Ptn kW
5.7	504	1360	0.9	CB130	T80C2	2.4
5.7	508	1440	3.6	CB250	T90S2	8.8
5.7	508	1445	3.6	CB250	T80C2	8.8
5.6	168	1433	0.7	CB110	T100A6	2.0
5.6	168	1433	0.7	CB110	T90LB6	2.0
5.6	518	1546	2.9	CB215	T90S2	6.3
5.5	518	1552	2.9	CB215	T80C2	6.3
5.5	525	1461	1.9	CB180	T90S2	4.6
5.5	261	1542	2.2	CB180	T90L4	5.0
5.5	525	1466	1.9	CB180	T80C2	4.6
5.4	174	1671	3.7	CB215	T90LB6	6.8
5.4	174	1671	3.7	CB215	T100A6	6.8
5.4	174	1671	2.2	CB180	T100A6	5.5
5.4	174	1671	2.2	CB180	T90LB6	5.5
5.4	267	1630	3.1	CB215	T90L4	6.4
5.3	177	1889	5.0	CB250	T100A6	13
5.3	177	1889	5.0	CB250	T90LB6	13
5.1	280	1542	2.4	85/180	T90L4	3.2
5.1	280	1486	1.7	85/150	T90L4	3.2
5.1	280	1429	1.1	70/130	T90L4	2.2
5.1	280	1429	1.1	63/130	T90L4	2.0
5.1	280	1429	1.1	85/130	T90L4	3.2
5.1	280	1430	0.7	70/110	T90L4	2.2
5.1	280	1430	0.7	63/110	T90L4	2.0
5.1	280	1430	0.7	85/110	T90L4	2.2
5.0	573	1566	3.6	CB250	T90S2	8.4
5.0	573	1573	3.6	CB250	T80C2	8.4
5.0	576	1519	1.1	CB150	T90S2	3.2
5.0	576	1489	0.7	CB130	T90S2	2.3
5.0	576	1525	1.1	CB150	T80C2	3.2
5.0	576	1496	0.7	CB130	T80C2	2.3
5.0	288	1701	1.5	CB150	T90L4	3.6
5.0	288	1643	1.0	CB130	T90L4	2.6
4.9	290	1802	4.7	CB250	T90L4	11
4.8	600	1582	2.6	CB215	T90S2	5.3
4.8	600	1612	1.6	CB180	T90S2	4.4
4.8	600	1588	2.6	CB215	T80C2	5.3
4.8	600	1618	1.6	CB180	T80C2	4.4
4.8	300	1862	3.0	CB215	T90L4	6.6
4.7	304	1768	2.0	CB180	T90L4	4.9
4.7	202	1848	1.4	CB150	T90LB6	3.7
4.7	202	1848	1.4	CB150	T100A6	3.7
4.7	202	1787	0.9	CB130	T90LB6	2.5
4.7	202	1787	0.9	CB130	T100A6	2.5
4.5	207	1988	4.6	CB250	T90LB6	10
4.5	207	1988	4.6	CB250	T100A6	10
4.4	323	1876	1.1	CB150	T90L4	3.5
4.4	323	1811	0.7	CB130	T90L4	2.5
4.4	213	2014	2.8	CB215	T100A6	6.6
4.4	213	2014	2.8	CB215	T90LB6	6.6
4.4	213	1917	1.9	CB180	T100A6	5.0
4.4	213	1917	1.9	CB180	T90LB6	5.0
4.1	231	2041	1.3	CB150	T100A6	3.5
4.1	231	2041	1.3	CB150	T90LB6	3.5
4.1	231	1971	0.8	CB130	T90LB6	2.4
4.1	231	1971	0.8	CB130	T100A6	2.4
4.1	710	1941	2.9	CB250	T90S2	8.4
4.0	710	1950	2.9	CB250	T80C2	8.4
4.0	720	1791	0.8	CB150	T90S2	3.0
4.0	720	1796	0.8	CB150	T80C2	3.0
4.0	360	2201	4.0	CB250	T90L4	9.7
3.9	240	2302	4.1	CB250	T100A6	10
3.9	240	2302	4.1	CB250	T90LB6	10
3.9	368	2099	1.7	CB180	T90L4	4.7
3.8	750	1977	2.0	CB215	T90S2	5.3
3.8	750	1865	1.3	CB180	T90S2	4.1
3.8	750	1982	2.0	CB215	T80C2	5.3
3.8	750	1870	1.2	CB180	T80C2	4.1
3.8	375	2218	2.5	CB215	T90L4	6.1
3.8	248	2306	2.5	CB215	T90LB6	6.4
3.8	248	2306	2.5	CB215	T100A6	6.4
3.8	248	2192	1.7	CB180	T90LB6	4.9
3.8	248	2192	1.7	CB180	T100A6	4.9
3.6	261	2268	1.7	CB180	T100A6	4.7
3.6	261	2268	1.7	CB180	T90LB6	4.7
3.6	400	2241	2.0	85/180	T90L4	2.4
3.6	400	2200	1.3	85/150	T90L4	2.4
3.6	400	2041	0.9	63/130	T90L4	1.5
3.6	400	2121	0.8	70/130	T90L4	1.7
3.6	400	2201	0.8	85/130	T90L4	2.4

1.7 - Getriebemotoren

n_2 min^{-1}	ir	T2 Nm	FS'		1.5 kW	Ptn kW
3.6	403	2260	1.0	CB150	T90L4	3.4
3.6	403	2180	0.6	CB130	T90L4	2.4
3.5	267	2361	2.4	CB215	T90LB6	6.0
3.5	267	2361	2.4	CB215	T100A6	6.0
3.4	420	2402	1.5	CB180	T90L4	4.7
3.3	428	2445	2.1	CB215	T90L4	5.8
3.3	435	2569	3.2	CB250	T90L4	9.2
3.3	434	2308	1.4	CB180	T90L4	4.3
3.3	288	2505	1.1	CB150	T100A6	3.4
3.3	288	2505	1.1	CB150	T90LB6	3.4
3.3	288	2418	0.7	CB130	T90LB6	2.3
3.3	288	2418	0.7	CB130	T100A6	2.3
3.2	290	2653	3.5	CB250	T90LB6	10
3.2	290	2653	3.5	CB250	T100A6	10
3.1	300	2746	2.2	CB215	T100A6	6.3
3.1	300	2746	2.2	CB215	T90LB6	6.3
3.1	304	2596	1.5	CB180	T100A6	4.6
3.1	304	2596	1.5	CB180	T90LB6	4.6
2.9	323	2708	0.9	CB150	T100A6	3.3
2.9	323	2708	0.9	CB150	T90LB6	3.3
2.8	504	2573	0.8	CB150	T90L4	3.0
2.8	508	2702	2.3	CB250	T90L4	8.1
2.8	518	2906	1.8	CB215	T90L4	5.7
2.7	525	2738	1.2	CB180	T90L4	4.3
2.6	360	3239	3.0	CB250	T100A6	9.2
2.6	360	3239	3.0	CB250	T90LB6	9.2
2.6	368	3090	1.3	CB180	T90LB6	4.5
2.6	368	3090	1.3	CB180	T100A6	4.5
2.5	375	3253	1.9	CB215	T90LB6	5.8
2.5	375	3253	1.9	CB215	T100A6	5.8
2.5	573	2923	2.3	CB250	T90L4	7.7
2.5	576	2888	0.7	CB150	T90L4	3.0
2.4	600	2950	1.6	CB215	T90L4	4.9
2.4	600	2768	1.5	85/180	T90L4	2.7
2.4	600	2709	1.1	85/150	T90L4	2.7
2.4	600	3071	1.0	CB180	T90L4	4.2
2.4	600	2589	0.7	63/130	T90L4	1.7
2.4	600	2589	0.7	70/130	T90L4	1.9
2.4	600	2647	0.7	85/130	T90L4	2.7
2.3	403	3321	0.7	CB150	T90LB6	3.2
2.3	403	3321	0.7	CB150	T100A6	3.2
2.2	420	3517	1.1	CB180	T100A6	4.5
2.2	420	3517	1.1	CB180	T90LB6	4.5
2.2	428	3516	1.6	CB215	T90LB6	5.4
2.2	428	3516	1.6	CB215	T100A6	5.4
2.2	434	3366	1.0	CB180	T100A6	4.2
2.2	434	3366	1.0	CB180	T90LB6	4.2
2.2	435	3781	2.4	CB250	T90LB6	8.8
2.2	435	3781	2.4	CB250	T100A6	8.8
2.0	710	3634	1.8	CB250	T90L4	7.7
1.9	750	3675	1.2	CB215	T90L4	4.9
1.9	750	3449	0.8	CB180	T90L4	3.8
1.9	508	3949	1.7	CB250	T90LB6	7.7
1.9	508	3949	1.7	CB250	T100A6	7.7
1.8	518	4194	1.4	CB215	T100A6	5.3
1.8	518	4194	1.4	CB215	T90LB6	5.3
1.8	525	4001	0.9	CB180	T90LB6	4.1
1.8	525	4001	0.9	CB180	T100A6	4.1
1.6	573	4281	1.7	CB250	T100A6	7.4
1.6	573	4281	1.7	CB250	T90LB6	7.4
1.6	600	4288	1.2	CB215	T90LB6	4.7
1.6	600	4288	1.2	CB215	T100A6	4.7
1.6	600	4380	0.8	CB180	T100A6	3.9
1.6	600	4380	0.8	CB180	T90LB6	3.9
1.5	956	4584	1.6	110/215	T90L4	2.7
1.5	980	4612	1.0	110/180	T90L4	2.7
1.5	980	4316	0.9	85/180	T90L4	1.6
1.5	980	4316	0.7	85/150	T90L4	1.6
1.5	980	4613	0.6	110/150	T90L4	2.7
1.3	710	5101	1.4	CB250	T100A6	7.2
1.3	710	5101	1.4	CB250	T90LB6	7.2
1.3	750	5388	0.9	CB215	T90LB6	4.7
1.3	750	5388	0.9	CB215	T100A6	4.7
1.0	1372	6475	1.1	110/215	T90L4	2.7
1.0	1372	5235	0.9	85/180	T90L4	1.6
1.0	1372	5511	0.8	110/180	T90L4	2.7
0.73	1960	7654	0.9	110/215	T90L4	2.7
0.73	1960	6673	0.7	85/180	T90L4	1.6
0.73	1960	7062	0.7	110/180	T90L4	2.7
0.51	2800	9827	0.7	110/215	T90L4	2.3

1.7 - Motoriduttori

n_2 min^{-1}	ir	T2 Nm	FS'		1.8 kW	Ptn kW
560	5	27.0	2.9	R63	T80D2	2.5
560	5	26.7	1.7	R50	T80D2	1.7
400	7	37.0	2.6	R70	T80D2	2.5
400	7	37.0	2.3	R63	T80D2	2.2
400	7	36.5	1.4	R50	T80D2	1.5
286	5	51.7	2.1	R63	T90LB4	2.5
280	10	51.6	2.0	R70	T80D2	2.2
280	10	51.6	1.8	R63	T80D2	2.0
280	10	51.6	1.1	R50	T80D2	1.4
204	7	71.5	3.5	R85	T90LB4	3.4
204	7	71.5	1.8	R70	T90LB4	2.5
204	7	70.7	1.6	R63	T90LB4	2.2
187	15	75.5	1.4	R70	T80D2	1.9
187	15	75.5	1.3	R63	T80D2	1.7
187	15	75.5	0.8	R50	T80D2	1.2
143	10	101.0	2.8	R85	T90LB4	3.2
143	10	99.8	1.4	R70	T90LB4	2.2
143	10	99.8	1.3	R63	T90LB4	2.0
140	20	98.2	1.2	R70	T80D2	1.7
140	20	98.2	1.1	R63	T80D2	1.5
134	7	111.8	5.2	R110	T100B6	5.6
134	7	110.5	2.7	R85	T100B6	3.2
134	7	110.5	1.4	R70	T100B6	2.4
100	28	127.2	0.9	R70	T80D2	1.3
100	28	128.9	0.8	R63	T80D2	1.2
95	15	146.0	1.9	R85	T90LB4	2.7
95	15	144.3	1.0	R70	T90LB4	1.9
95	15	144.2	0.9	R63	T90LB4	1.7
94	10	159.8	5.9	R130	T100B6	7.2
94	10	157.9	4.1	R110	T100B6	5.2
94	10	156.0	2.1	R85	T100B6	3.0
94	10	154.1	1.1	R70	T100B6	2.1
72	20	189.9	1.6	R85	T90LB4	2.4
72	20	185.1	0.8	R70	T90LB4	1.7
72	20	185.2	0.7	R63	T90LB4	1.5
70	40	196.5	5.7	CB130	T80D2	5.6
70	40	176.8	1.4	R85	T80D2	1.6
70	40	174.3	0.7	R70	T80D2	1.2
70	40	174.3	0.6	R63	T80D2	1.1
65	43	211.2	3.0	CB110	T80D2	4.2
65	43	208.6	1.6	CB85	T80D2	2.4
64	44	210.7	0.8	CB70	T80D2	1.8
63	15	234.0	6.4	R150	T100B6	8.8
63	15	234.0	4.2	R130	T100B6	6.4
63	15	225.5	2.8	R110	T100B6	4.2
63	15	222.7	1.5	R85	T100B6	2.4
63	15	219.9	0.8	R70	T100B6	1.7
57	49	210.6	1.1	R85	T80D2	1.6
57	49	204.5	0.6	R70	T80D2	1.1
56	50	242.5	4.9	CB130	T80D2	5.3
55	51	250.5	2.5	CB110	T80D2	4.2
55	51	247.4	1.3	CB85	T80D2	2.4
55	51	244.2	0.7	CB70	T80D2	1.8
51	28	242.3	1.1	R85	T90LB4	1.8
51	28	239.0	0.6	R70	T90LB4	1.3
50	56	240.6	0.9	R85	T80D2	1.6
48	58	281.3	6.4	CB150	T80D2	7.1
48	58	281.3	4.3	CB130	T80D2	5.3
47	59	289.8	2.3	CB110	T80D2	4.2
47	59	286.1	1.2	CB85	T80D2	2.4
47	59	282.6	0.6	CB70	T80D2	1.8
47	20	308.2	5.5	R150	T100B6	8.3
47	20	308.2	3.5	R130	T100B6	6.0
47	20	297.0	2.4	R110	T100B6	4.0
47	20	289.4	1.3	R85	T100B6	2.2
41	69	334.7	2.2	CB110	T80D2	4.2
41	69	330.4	1.1	CB85	T80D2	2.4
40	70	283.6	0.7	R85	T80D2	1.3
39	72	349.2	5.5	CB150	T80D2	7.1
39	72	344.8	3.7	CB130	T80D2	5.1
36	40	379.9	5.5	CB150	T90LB4	7.1
36	40	375.0	3.7	CB130	T90LB4	5.1
36	40	346.2	1.8	R110	T90LB4	3.0
36	40	331.7	0.9	R85	T90LB4	1.6
35	80	353.6	1.9	CB110	T80D2	3.2
35	80	339.0	0.9	CB85	T80D2	1.7
35	80	309.3	0.6	R85	T80D2	1.2
34	28	389.5	3.9	R150	T100B6	5.7
34	28	394.8	2.4	R130	T100B6	4.3
34	28	378.9	1.8	R110	T100B6	3.0
34	28	363.2	0.9	R85	T100B6	1.6
33	43	403.1	1.9	CB110	T90LB4	3.8
33	43	397.9	1.0	CB85	T90LB4	2.2

1.7 - *Gearmotors*

n_2 min^{-1}	ir	T2 Nm	FS'		1.8 kW	Ptn kW
33	85	396.6	4.8	CB150	T80D2	6.2
33	85	386.2	3.1	CB130	T80D2	4.3
29	49	406.5	1.4	R110	T90LB4	2.7
29	49	383.0	0.7	R85	T90LB4	1.6
29	50	468.8	4.7	CB150	T90LB4	6.7
29	50	468.8	3.1	CB130	T90LB4	5.1
28	51	478.1	1.6	CB110	T90LB4	3.8
28	51	472.0	0.9	CB85	T90LB4	2.2
28	52	493.8	6.6	CB180	T90LB4	9.7
26	107	492.7	5.9	CB180	T80D2	8.2
26	56	464.5	1.0	R110	T90LB4	2.7
26	56	444.1	0.6	R85	T90LB4	1.6
25	110	486.4	1.4	CB110	T80D2	3.2
25	110	459.2	0.7	CB85	T80D2	1.7
25	37	542.3	6.2	CB180	T100B6	9.3
25	58	536.7	4.1	CB150	T90LB4	6.4
25	58	536.8	2.7	CB130	T90LB4	4.9
24	115	529.5	3.9	CB150	T80D2	5.9
24	115	515.4	2.5	CB130	T80D2	4.2
24	59	539.0	1.6	CB110	T90LB4	3.8
24	59	531.8	0.9	CB85	T90LB4	2.2
24	40	586.4	4.0	CB150	T100B6	6.7
24	40	548.8	3.0	R150	T100B6	5.5
24	40	578.9	2.7	CB130	T100B6	4.7
24	40	533.8	2.0	R130	T100B6	3.7
24	40	511.2	1.4	R110	T100B6	2.6
24	40	496.4	0.7	R85	T100B6	1.5
23	62	581.5	5.5	CB180	T90LB4	9.3
23	124	571.0	5.3	CB180	T80D2	8.2
22	43	614.3	1.4	CB110	T100B6	3.8
22	129	562.1	1.3	CB110	T80D2	3.2
22	129	530.7	0.7	CB85	T80D2	1.7
21	69	630.6	1.4	CB110	T90LB4	3.8
21	69	622.0	0.7	CB85	T90LB4	2.2
20	70	538.7	0.9	R110	T90LB4	2.3
19.9	72	666.5	3.5	CB150	T90LB4	6.4
19.9	72	657.9	2.3	CB130	T90LB4	4.7
19.4	144	654.4	3.3	CB150	T80D2	5.7
19.4	144	636.6	2.2	CB130	T80D2	4.0
19.2	49	635.6	2.4	R150	T100B6	4.8
19.2	49	635.7	1.6	R130	T100B6	3.5
19.2	49	607.9	1.1	R110	T100B6	2.5
19.1	75	694.1	4.8	CB180	T90LB4	8.9
18.8	50	723.6	3.4	CB150	T100B6	6.4
18.8	50	723.6	2.2	CB130	T100B6	4.5
18.7	150	681.3	4.7	CB180	T80D2	7.9
18.4	51	709.3	1.4	CB110	T100B6	3.4
18.1	52	762.2	4.8	CB180	T100B6	9.3
17.9	80	663.3	1.2	CB110	T90LB4	2.9
17.9	80	596.0	0.8	R110	T90LB4	2.2
17.9	80	625.2	0.6	CB85	T90LB4	1.5
17.3	162	666.5	2.8	CB150	T80D2	4.5
17.3	162	646.5	1.8	CB130	T80D2	3.2
16.8	85	756.3	4.4	CB180	T90LB4	7.9
16.8	85	746.0	3.1	CB150	T90LB4	5.5
16.8	85	735.8	2.0	CB130	T90LB4	4.0
16.8	56	715.6	2.1	R150	T100B6	4.7
16.8	56	715.7	1.3	R130	T100B6	3.4
16.8	56	673.6	0.8	R110	T100B6	2.3
16.7	168	680.6	1.0	CB110	T80D2	2.6
16.2	58	828.3	3.0	CB150	T100B6	6.2
16.2	58	828.4	2.0	CB130	T100B6	4.3
16.1	174	726.4	3.8	CB180	T80D2	6.4
15.9	59	820.6	1.2	CB110	T100B6	3.4
15.2	62	897.4	4.0	CB180	T100B6	8.9
14.3	100	685.4	0.6	R110	T90LB4	1.9
13.9	202	818.6	2.4	CB150	T80D2	4.4
13.9	202	793.6	1.6	CB130	T80D2	3.1
13.6	69	959.9	1.0	CB110	T100B6	3.4
13.4	70	828.7	1.6	R150	T100B6	4.0
13.4	70	815.6	1.1	R130	T100B6	2.9
13.4	70	789.6	0.7	R110	T100B6	2.1
13.4	107	939.3	3.7	CB180	T90LB4	7.6
13.2	213	888.9	4.8	CB215	T80D2	7.8
13.2	213	849.8	3.3	CB180	T80D2	5.8
13.1	72	1015	2.6	CB150	T100B6	5.9
13.1	72	1015	1.7	CB130	T100B6	4.2
13.0	110	873	1.0	CB110	T90LB4	2.9
12.8	112	1010	6.3	CB215	T90LB4	10
12.5	75	1072	6.4	CB215	T100B6	10

1.7 - Getriebemotoren

n_2 min^{-1}	ir	T2 Nm	FS'		1.8 kW	Ptn kW
12.5	75	1072	3.5	CB180	T100B6	8.5
12.4	225	885	0.8	CB110	T80D2	2.5
12.4	115	996	2.5	CB150	T90LB4	5.3
12.4	115	982	1.6	CB130	T90LB4	3.9
12.1	231	908	2.2	CB150	T80D2	4.1
12.1	231	879	1.4	CB130	T80D2	3.0
11.8	121	1076	5.5	CB215	T90LB4	9.6
11.8	80	1128	5.8	CB215	T100B6	10
11.8	80	932	1.4	R150	T100B6	3.9
11.8	80	902	1.0	R130	T100B6	2.7
11.8	80	992	0.9	CB110	T100B6	2.9
11.8	80	872	0.6	R110	T100B6	2.0
11.5	124	1074	3.4	CB180	T90LB4	7.3
11.3	248	1020	4.4	CB215	T80D2	7.6
11.3	248	974	3.0	CB180	T80D2	5.7
11.1	129	1023	0.9	CB110	T90LB4	2.9
11.1	85	1150	3.2	CB180	T100B6	7.3
11.1	85	1150	2.2	CB150	T100B6	5.3
11.1	85	1118	1.4	CB130	T100B6	3.5
10.7	261	1009	2.8	CB180	T80D2	5.5
10.5	267	1065	4.0	CB215	T80D2	7.2
10.2	140	1094	3.4	85/180	T90LB4	3.4
10.2	140	1078	2.4	85/150	T90LB4	3.4
10.2	140	1027	1.6	63/130	T90LB4	2.2
10.2	140	1044	1.6	85/130	T90LB4	3.4
10.2	140	1044	1.6	70/130	T90LB4	2.5
10.2	140	1010	1.0	63/110	T90LB4	2.2
10.2	140	1027	1.0	70/110	T90LB4	2.5
10.2	140	1027	1.0	85/110	T90LB4	2.5
9.9	144	1229	2.1	CB150	T90LB4	5.1
9.9	144	1212	1.3	CB130	T90LB4	3.7
9.8	146	1282	4.8	CB215	T90LB4	9.3
9.7	288	1096	1.9	CB150	T80D2	3.9
9.7	288	1079	1.2	CB130	T80D2	2.9
9.7	290	1157	6.2	CB250	T80D2	11
9.5	150	1299	2.9	CB180	T90LB4	7.3
9.4	100	1090	1.1	R150	T100B6	3.5
9.4	100	1034	0.8	R130	T100B6	2.4
9.3	300	1216	3.9	CB215	T80D2	7.4
9.2	304	1157	2.6	CB180	T80D2	5.4
8.8	162	1227	1.8	CB150	T90LB4	4.0
8.8	162	1207	1.1	CB130	T90LB4	3.0
8.8	107	1427	2.7	CB180	T100B6	7.0
8.7	323	1210	1.5	CB150	T80D2	3.8
8.7	323	1170	0.9	CB130	T80D2	2.7
8.6	110	1302	0.8	CB110	T100B6	2.4
8.5	168	1252	0.6	CB110	T90LB4	2.3
8.4	112	1558	4.6	CB215	T100B6	9.6
8.2	174	1318	4.2	CB215	T90LB4	6.8
8.2	174	1359	2.4	CB180	T90LB4	5.8
8.2	115	1514	1.8	CB150	T100B6	4.9
8.2	115	1492	1.1	CB130	T100B6	3.4
8.1	177	1532	5.5	CB250	T90LB4	14
7.8	120	1647	5.8	CB250	T100B6	14
7.8	360	1414	5.3	CB250	T80D2	11
7.8	121	1637	4.0	CB215	T100B6	8.9
7.6	368	1378	2.3	CB180	T80D2	5.2
7.6	124	1655	2.4	CB180	T100B6	7.0
7.5	375	1450	3.2	CB215	T80D2	6.8
7.3	129	1526	0.7	CB110	T100B6	2.4
7.2	200	1491	2.7	85/180	T90LB4	3.2
7.2	200	1467	1.9	85/150	T90LB4	3.2
7.2	200	1419	1.3	70/130	T90LB4	2.2
7.2	200	1419	1.3	63/130	T90LB4	2.0
7.2	200	1443	1.2	85/130	T90LB4	3.2
7.2	200	1418	0.7	70/110	T90LB4	2.2
7.2	200	1418	0.7	63/110	T90LB4	2.0
7.2	200	1442	0.7	85/110	T90LB4	2.2
7.1	202	1506	1.5	CB150	T90LB4	3.9
7.1	202	1481	1.0	CB130	T90LB4	2.9
7.0	403	1484	1.3	CB150	T80D2	3.7
7.0	403	1435	0.8	CB130	T80D2	2.7
6.9	207	1617	5.1	CB250	T90LB4	11
6.7	213	1640	3.1	CB215	T90LB4	7.0
6.7	213	1563	2.1	CB180	T90LB4	5.2
6.7	420	1572	2.0	CB180	T80D2	5.2
6.5	428	1603	2.7	CB215	T80D2	6.4
6.5	144	1894	1.5	CB150	T100B6	4.9
6.5	144	1840	1.0	CB130	T100B6	3.3
6.5	145	1963	5.1	CB250	T100B6	14

1.7 - Motoriduttori

n_2 min^{-1}	ir	T2 Nm	FS'		1.8 kW	Ptn kW
6.5	434	1519	1.8	CB180	T80D2	4.7
6.4	435	1682	4.1	CB250	T80D2	10
6.4	146	1948	3.5	CB215	T100B6	8.6
6.3	150	1972	2.1	CB180	T100B6	6.8
6.2	231	1666	1.4	CB150	T90LB4	3.7
6.2	231	1611	0.9	CB130	T90LB4	2.7
6.0	240	1846	4.6	CB250	T90LB4	11
5.8	162	1858	1.3	CB150	T100B6	3.8
5.8	162	1797	0.9	CB130	T100B6	2.6
5.8	248	1877	2.8	CB215	T90LB4	6.8
5.8	248	1788	1.9	CB180	T90LB4	5.1
5.6	504	1700	1.0	CB150	T80D2	3.3
5.6	504	1669	0.7	CB130	T80D2	2.4
5.5	508	1778	2.9	CB250	T80D2	8.8
5.5	261	1851	1.8	CB180	T90LB4	5.0
5.4	518	1907	2.4	CB215	T80D2	6.3
5.4	174	2061	3.0	CB215	T100B6	6.8
5.4	174	2061	1.8	CB180	T100B6	5.5
5.4	267	1956	2.6	CB215	T90LB4	6.4
5.3	525	1806	1.5	CB180	T80D2	4.6
5.3	177	2329	4.0	CB250	T100B6	13
5.1	280	1850	2.0	85/180	T90LB4	3.2
5.1	280	1783	1.4	85/150	T90LB4	3.2
5.1	280	1715	0.9	70/130	T90LB4	2.2
5.1	280	1715	0.9	63/130	T90LB4	2.0
5.1	280	1715	0.9	85/130	T90LB4	3.2
5.0	288	2041	1.2	CB150	T90LB4	3.6
5.0	288	1971	0.8	CB130	T90LB4	2.6
4.9	290	2162	3.9	CB250	T90LB4	11
4.9	573	1933	2.9	CB250	T80D2	8.4
4.9	576	1874	0.9	CB150	T80D2	3.2
4.9	576	1840	0.6	CB130	T80D2	2.3
4.8	300	2234	2.5	CB215	T90LB4	6.6
4.7	304	2122	1.7	CB180	T90LB4	4.9
4.7	600	1951	2.1	CB215	T80D2	5.3
4.7	600	1988	1.3	CB180	T80D2	4.4
4.7	202	2279	1.1	CB150	T100B6	3.7
4.7	202	2204	0.7	CB130	T100B6	2.5
4.5	207	2452	3.7	CB250	T100B6	10
4.4	323	2251	0.9	CB150	T90LB4	3.5
4.4	213	2484	2.3	CB215	T100B6	6.6
4.4	213	2364	1.6	CB180	T100B6	5.0
4.1	231	2518	1.0	CB150	T100B6	3.5
4.1	231	2431	0.7	CB130	T100B6	2.4
4.0	360	2641	3.4	CB250	T90LB4	9.7
3.9	710	2400	2.4	CB250	T80D2	8.4
3.9	240	2840	3.3	CB250	T100B6	10
3.9	368	2519	1.5	CB180	T90LB4	4.7
3.9	720	2210	0.7	CB150	T80D2	3.0
3.8	375	2662	2.1	CB215	T90LB4	6.1
3.8	248	2844	2.0	CB215	T100B6	6.4
3.8	248	2704	1.4	CB180	T100B6	4.9
3.7	750	2442	1.6	CB215	T80D2	5.3
3.7	750	2305	1.0	CB180	T80D2	4.1
3.6	261	2797	1.3	CB180	T100B6	4.7
3.6	400	2689	1.6	85/180	T90LB4	2.4
3.6	400	2640	1.1	85/150	T90LB4	2.4
3.6	400	2449	0.7	63/130	T90LB4	1.5
3.6	400	2545	0.7	70/130	T90LB4	1.7
3.6	400	2641	0.7	85/130	T90LB4	2.4
3.6	403	2712	0.8	CB150	T90LB4	3.4
3.5	267	2912	1.9	CB215	T100B6	6.0
3.4	420	2882	1.3	CB180	T90LB4	4.7
3.3	428	2934	1.7	CB215	T90LB4	5.8
3.3	435	3083	2.6	CB250	T90LB4	9.2
3.3	434	2769	1.1	CB180	T90LB4	4.3
3.3	288	3089	0.9	CB150	T100B6	3.4
3.2	290	3272	2.9	CB250	T100B6	10
3.1	300	3387	1.8	CB215	T100B6	6.3
3.1	304	3202	1.2	CB180	T100B6	4.6
2.9	323	3340	0.7	CB150	T100B6	3.3
2.8	504	3087	0.6	CB150	T90LB4	3.0
2.8	508	3242	1.9	CB250	T90LB4	8.1
2.8	518	3487	1.5	CB215	T90LB4	5.7
2.7	525	3286	1.0	CB180	T90LB4	4.3
2.6	360	3994	2.4	CB250	T100B6	9.2
2.6	368	3811	1.1	CB180	T100B6	4.5
2.5	375	4012	1.5	CB215	T100B6	5.8
2.5	573	3507	1.9	CB250	T90LB4	7.7
2.4	600	3540	1.4	CB215	T90LB4	4.9

1.7 - *Gearmotors*

n_2 min^{-1}	ir	T2 Nm	FS'		1.8 kW	Ptn kW
2.4	600	3322	1.3	85/180	T90LB4	2.7
2.4	600	3250	0.9	85/150	T90LB4	2.7
2.4	600	3685	0.8	CB180	T90LB4	4.2
2.2	420	4338	0.9	CB180	T100B6	4.5
2.2	428	4337	1.3	CB215	T100B6	5.4
2.2	434	4152	0.8	CB180	T100B6	4.2
2.2	435	4663	1.9	CB250	T100B6	8.8
2.0	710	4361	1.5	CB250	T90LB4	7.7
1.9	750	4410	1.0	CB215	T90LB4	4.9
1.9	750	4139	0.7	CB180	T90LB4	3.8
1.9	508	4870	1.4	CB250	T100B6	7.7
1.8	518	5173	1.1	CB215	T100B6	5.3
1.8	525	4934	0.7	CB180	T100B6	4.1
1.6	573	5280	1.4	CB250	T100B6	7.4
1.6	600	5289	1.0	CB215	T100B6	4.7
1.6	600	5401	0.6	CB180	T100B6	3.9
1.5	956	5501	1.3	110/215	T90LB4	2.7
1.5	980	5535	0.8	110/180	T90LB4	2.7
1.5	980	5179	0.7	85/180	T90LB4	1.6
1.3	710	6291	1.2	CB250	T100B6	7.2
1.3	750	6645	0.7	CB215	T100B6	4.7
1.0	1372	7770	0.9	110/215	T90LB4	2.7
1.0	1372	6282	0.7	85/180	T90LB4	1.6
1.0	1372	6613	0.7	110/180	T90LB4	2.7
0.73	1960	9185	0.8	110/215	T90LB4	2.7
0.51	2800	11793	0.6	110/215	T90LB4	2.3

1.7 - Getriebemotoren

n_2 min^{-1}	ir	T2 Nm	FS'		2.2 kW	Ptn kW
570	5	32.4	2.4	R63	T90L2	2.5
407	7	44.4	4.0	R85	T90L2	3.4
407	7	44.4	2.1	R70	T90L2	2.5
407	7	44.4	1.9	R63	T90L2	2.2
285	10	62.7	3.3	R85	T90L2	3.2
285	10	61.9	1.7	R70	T90L2	2.2
285	10	61.9	1.5	R63	T90L2	2.0
204	7	88.4	5.4	R110	T100A4	6.0
204	7	87.4	2.8	R85	T100A4	3.4
204	7	87.4	1.5	R70	T100A4	2.5
190	15	90.7	2.3	R85	T90L2	2.7
190	15	90.7	1.2	R70	T90L2	1.9
190	15	90.7	1.1	R63	T90L2	1.7
143	10	127.8	6.2	R130	T100A4	8.4
143	10	124.9	4.3	R110	T100A4	5.6
143	10	123.4	2.3	R85	T100A4	3.2
143	10	121.9	1.2	R70	T100A4	2.2
143	20	119.4	2.0	R85	T90L2	2.4
143	20	117.9	1.0	R70	T90L2	1.7
143	20	117.9	0.9	R63	T90L2	1.5
137	7	133.3	6.4	R130	T112A6	8.4
137	7	130.2	4.4	R110	T112A6	5.6
137	7	128.7	2.3	R85	T112A6	3.2
137	7	128.7	1.2	R70	T112A6	2.4
134	7	136.1	6.3	R130	T100BL6	8.4
134	7	133.0	4.3	R110	T100BL6	5.6
134	7	131.4	2.3	R85	T100BL6	3.2
134	7	131.4	1.2	R70	T100BL6	2.4
102	28	154.8	1.4	R85	T90L2	1.8
102	28	152.7	0.7	R70	T90L2	1.3
102	28	154.8	0.7	R63	T90L2	1.2
96	10	186.0	5.1	R130	T112A6	7.2
96	10	183.8	3.5	R110	T112A6	5.2
96	10	181.6	1.8	R85	T112A6	3.0
96	10	179.4	0.9	R70	T112A6	2.1
95	15	185.1	4.5	R130	T100A4	6.8
95	15	180.7	3.0	R110	T100A4	4.6
95	15	178.5	1.6	R85	T100A4	2.7
95	15	176.3	0.8	R70	T100A4	1.9
94	10	190.0	5.0	R130	T100BL6	7.2
94	10	187.8	3.4	R110	T100BL6	5.2
94	10	185.5	1.8	R85	T100BL6	3.0
94	10	183.2	0.9	R70	T100BL6	2.1
72	20	246.8	5.8	R150	T100A4	9.3
72	20	243.9	3.8	R130	T100A4	6.4
72	20	238.0	2.6	R110	T100A4	4.4
72	20	232.1	1.3	R85	T100A4	2.4
71	40	235.9	4.7	CB130	T90L2	5.6
71	40	218.2	2.3	R110	T90L2	3.0
71	40	212.3	1.1	R85	T90L2	1.6
71	40	209.4	0.6	R70	T90L2	1.2
66	43	253.6	2.5	CB110	T90L2	4.2
66	43	250.5	1.3	CB85	T90L2	2.4
65	44	253.0	0.7	CB70	T90L2	1.8
64	15	272.5	5.5	R150	T112A6	8.8
64	15	272.5	3.6	R130	T112A6	6.4
64	15	262.6	2.4	R110	T112A6	4.2
64	15	259.3	1.3	R85	T112A6	2.4
64	15	256.0	0.7	R70	T112A6	1.7
63	15	278.2	5.4	R150	T100BL6	8.8
63	15	278.3	3.6	R130	T100BL6	6.4
63	15	268.2	2.4	R110	T100BL6	4.2
63	15	264.9	1.3	R85	T100BL6	2.4
63	15	261.5	0.7	R70	T100BL6	1.7
58	49	260.1	1.7	R110	T90L2	2.7
58	49	252.8	0.9	R85	T90L2	1.6
57	50	294.9	6.2	CB150	T90L2	7.4
57	50	291.2	4.1	CB130	T90L2	5.3
56	51	300.8	2.1	CB110	T90L2	4.2
56	51	297.1	1.1	CB85	T90L2	2.4
51	28	312.6	4.1	R150	T100A4	6.2
51	28	312.7	2.6	R130	T100A4	4.5
51	28	308.6	1.8	R110	T100A4	3.3
51	28	296.1	0.9	R85	T100A4	1.8
51	56	293.1	1.2	R110	T90L2	2.7
51	56	288.9	0.8	R85	T90L2	1.6
49	58	337.8	5.4	CB150	T90L2	7.1
49	58	337.8	3.5	CB130	T90L2	5.3
48	59	347.9	1.9	CB110	T90L2	4.2
48	59	343.5	1.0	CB85	T90L2	2.4
48	20	358.9	4.7	R150	T112A6	8.3

1.7 - Motoriduttori

n_2 min^{-1}	ir	T2 Nm	FS'		2.2 kW	Ptn kW
48	20	358.9	3.0	R130	T112A6	6.0
48	20	345.8	2.1	R110	T112A6	4.0
48	20	337.0	1.1	R85	T112A6	2.2
47	20	366.6	4.6	R150	T100BL6	8.3
47	20	366.6	2.9	R130	T100BL6	6.0
47	20	353.1	2.0	R110	T100BL6	4.0
47	20	344.2	1.1	R85	T100BL6	2.2
41	69	401.9	1.8	CB110	T90L2	4.2
41	69	396.9	1.0	CB85	T90L2	2.4
41	70	351.0	1.1	R110	T90L2	2.3
41	70	340.7	0.6	R85	T90L2	1.3
40	72	419.3	4.6	CB150	T90L2	7.1
40	72	414.0	3.1	CB130	T90L2	5.1
38	75	436.8	6.3	CB180	T90L2	9.7
36	40	464.3	4.5	CB150	T100A4	7.1
36	40	440.8	3.2	R150	T100A4	6.0
36	40	458.4	3.0	CB130	T100A4	5.1
36	40	429.0	2.1	R130	T100A4	4.0
36	40	423.2	1.5	R110	T100A4	3.0
36	40	405.4	0.8	R85	T100A4	1.6
36	80	424.7	1.6	CB110	T90L2	3.2
36	80	389.3	1.0	R110	T90L2	2.2
36	80	407.1	0.8	CB85	T90L2	1.7
34	28	453.4	3.3	R150	T112A6	5.7
34	28	459.5	2.0	R130	T112A6	4.3
34	28	441.2	1.5	R110	T112A6	3.0
34	28	422.8	0.8	R85	T112A6	1.6
34	28	463.2	3.2	R150	T100BL6	5.7
34	28	469.4	2.0	R130	T100BL6	4.3
34	28	450.6	1.5	R110	T100BL6	3.0
34	28	431.9	0.7	R85	T100BL6	1.6
34	85	476.2	5.7	CB180	T90L2	8.5
34	85	476.2	4.0	CB150	T90L2	6.2
34	85	463.6	2.6	CB130	T90L2	4.3
33	43	492.7	1.6	CB110	T100A4	3.8
29	49	511.2	2.6	R150	T100A4	5.5
29	49	504.0	1.7	R130	T100A4	3.6
29	49	496.8	1.2	R110	T100A4	2.7
29	50	573.0	3.9	CB150	T100A4	6.7
29	50	573.0	2.5	CB130	T100A4	5.1
29	100	457.0	0.8	R110	T90L2	1.9
28	51	584.4	1.3	CB110	T100A4	3.8
28	52	603.5	5.4	CB180	T100A4	9.7
27	107	591.5	4.9	CB180	T90L2	8.2
26	37	631.5	5.3	CB180	T112A6	9.3
26	110	583.7	1.2	CB110	T90L2	3.2
26	110	551.2	0.6	CB85	T90L2	1.7
26	56	600.5	2.2	R150	T100A4	5.5
26	56	567.6	1.4	R130	T100A4	3.5
26	56	567.7	0.8	R110	T100A4	2.7
25	37	645.0	5.2	CB180	T100BL6	9.3
25	115	635.9	3.2	CB150	T90L2	5.9
25	115	618.9	2.1	CB130	T90L2	4.2
25	58	656.0	3.4	CB150	T100A4	6.4
25	58	656.1	2.2	CB130	T100A4	4.9
24	59	658.7	1.3	CB110	T100A4	3.8
24	40	682.8	3.4	CB150	T112A6	6.7
24	40	639.1	2.6	R150	T112A6	5.5
24	40	674.1	2.3	CB130	T112A6	4.7
24	40	621.5	1.7	R130	T112A6	3.7
24	40	595.2	1.2	R110	T112A6	2.6
24	40	577.8	0.6	R85	T112A6	1.5
24	40	697.4	3.4	CB150	T100BL6	6.7
24	40	652.6	2.5	R150	T100BL6	5.5
24	40	688.5	2.2	CB130	T100BL6	4.7
24	40	634.7	1.6	R130	T100BL6	3.7
24	40	607.9	1.2	R110	T100BL6	2.6
24	40	590.3	0.6	R85	T100BL6	1.5
23	62	710.7	4.5	CB180	T100A4	9.3
23	124	685.7	4.4	CB180	T90L2	8.2
22	43	715.2	1.2	CB110	T112A6	3.8
22	129	675.2	1.1	CB110	T90L2	3.2
22	43	730.6	1.2	CB110	T100BL6	3.8
21	69	770.7	1.1	CB110	T100A4	3.8
20	70	689.1	1.7	R150	T100A4	4.5
20	70	688.9	1.2	R130	T100A4	3.3
20	70	658.4	0.7	R110	T100A4	2.3
20	72	814.6	2.9	CB150	T100A4	6.4
20	72	804.1	1.9	CB130	T100A4	4.7
20	144	785.6	2.8	CB150	T90L2	5.7

1.7 - *Gearmotors*

n_2 min^{-1}	ir	T2 Nm	FS'		2.2 kW	Ptn kW
20	144	764.4	1.8	CB130	T90L2	4.0
20	49	739.9	2.1	R150	T112A6	4.8
20	49	739.9	1.4	R130	T112A6	3.5
20	49	707.9	0.9	R110	T112A6	2.5
20	146	818.0	6.4	CB215	T90L2	10
19	50	842.6	2.9	CB150	T112A6	6.4
19	50	842.6	1.9	CB130	T112A6	4.5
19	49	755.9	2.0	R150	T100BL6	4.8
19	49	755.9	1.3	R130	T100BL6	3.5
19	49	722.9	0.9	R110	T100BL6	2.5
19	75	848.4	3.9	CB180	T100A4	8.9
19	150	818.3	3.9	CB180	T90L2	7.9
19	51	826.3	1.2	CB110	T112A6	3.4
19	50	860.5	2.9	CB150	T100BL6	6.4
19	50	860.5	1.9	CB130	T100BL6	4.5
18	52	887.7	4.1	CB180	T112A6	9.3
18	51	843.5	1.2	CB110	T100BL6	3.4
18	52	906.4	4.0	CB180	T100BL6	9.3
18	80	893.1	6.5	CB215	T100A4	10
18	80	775.4	1.5	R150	T100A4	4.4
18	80	752.0	1.0	R130	T100A4	3.0
18	80	810.7	1.0	CB110	T100A4	2.9
18	80	728.4	0.7	R110	T100A4	2.2
18	162	800.3	2.3	CB150	T90L2	4.5
18	162	776.5	1.5	CB130	T90L2	3.2
17	56	833.5	1.8	R150	T112A6	4.7
17	56	833.5	1.1	R130	T112A6	3.4
17	56	784.5	0.7	R110	T112A6	2.3
17	168	817.5	0.8	CB110	T90L2	2.6
17	85	924.3	3.6	CB180	T100A4	7.9
17	85	911.8	2.5	CB150	T100A4	5.5
17	85	899.3	1.6	CB130	T100A4	4.0
17	56	851.0	1.8	R150	T100BL6	4.7
17	56	851.1	1.1	R130	T100BL6	3.4
17	56	801.1	0.7	R110	T100BL6	2.3
17	58	964.9	2.6	CB150	T112A6	6.2
17	58	964.9	1.7	CB130	T112A6	4.3
16	174	808.1	5.8	CB215	T90L2	6.8
16	174	872.3	3.2	CB180	T90L2	6.4
16	59	955.7	1.0	CB110	T112A6	3.4
16	58	985.0	2.5	CB150	T100BL6	6.2
16	58	985.1	1.6	CB130	T100BL6	4.3
15.9	59	975.8	1.0	CB110	T100BL6	3.4
15.5	62	1045	6.3	CB215	T112A6	11
15.5	62	1045	3.4	CB180	T112A6	8.9
15.2	62	1067	6.1	CB215	T100BL6	11
15.2	62	1067	3.3	CB180	T100BL6	8.9
14.3	100	911	1.1	R150	T100A4	3.9
14.3	100	867	0.8	R130	T100A4	2.7
14.1	202	983	2.0	CB150	T90L2	4.4
14.1	202	953	1.3	CB130	T90L2	3.1
13.9	69	1118	0.9	CB110	T112A6	3.4
13.7	70	965	1.4	R150	T112A6	4.0
13.7	70	950	1.0	R130	T112A6	2.9
13.6	69	1142	0.9	CB110	T100BL6	3.4
13.4	70	986	1.4	R150	T100BL6	4.0
13.4	70	970	1.0	R130	T100BL6	2.9
13.4	213	1068	4.0	CB215	T90L2	7.8
13.4	213	1021	2.7	CB180	T90L2	5.8
13.4	107	1148	3.1	CB180	T100A4	7.6
13.3	72	1182	2.2	CB150	T112A6	5.9
13.3	72	1182	1.4	CB130	T112A6	4.2
13.1	72	1207	2.2	CB150	T100BL6	5.9
13.1	72	1207	1.4	CB130	T100BL6	4.2
13.0	110	1067	0.8	CB110	T100A4	2.9
12.8	75	1248	5.5	CB215	T112A6	10
12.8	75	1248	3.0	CB180	T112A6	8.5
12.8	112	1234	5.1	CB215	T100A4	10
12.7	225	1062	0.7	CB110	T90L2	2.5
12.5	75	1274	5.4	CB215	T100BL6	10
12.5	75	1274	2.9	CB180	T100BL6	8.5
12.4	115	1217	2.0	CB150	T100A4	5.3
12.4	115	1200	1.3	CB130	T100A4	3.9
12.3	231	1090	1.8	CB150	T90L2	4.1
12.3	231	1056	1.2	CB130	T90L2	3.0
12.0	80	1313	4.9	CB215	T112A6	10
12.0	80	1085	1.2	R150	T112A6	3.9
12.0	80	1051	0.8	R130	T112A6	2.7
12.0	80	1155	0.8	CB110	T112A6	2.9
11.9	240	1185	6.1	CB250	T90L2	11

1.7 - Getriebemotoren

n_2 min^{-1}	ir	T2 Nm	FS'		2.2 kW	Ptn kW
11.8	121	1315	4.5	CB215	T100A4	9.6
11.8	80	1341	4.8	CB215	T100BL6	10
11.8	80	1109	1.2	R150	T100BL6	3.9
11.8	80	1073	0.8	R130	T100BL6	2.7
11.8	80	1180	0.8	CB110	T100BL6	2.9
11.5	124	1312	2.8	CB180	T100A4	7.3
11.5	248	1225	3.6	CB215	T90L2	7.6
11.5	248	1170	2.5	CB180	T90L2	5.7
11.3	85	1340	2.8	CB180	T112A6	7.3
11.3	85	1340	1.9	CB150	T112A6	5.3
11.3	85	1302	1.2	CB130	T112A6	3.5
11.1	129	1250	0.7	CB110	T100A4	2.9
11.1	85	1368	2.7	CB180	T100BL6	7.3
11.1	85	1368	1.9	CB150	T100BL6	5.3
11.1	85	1330	1.2	CB130	T100BL6	3.5
10.9	261	1212	2.4	CB180	T90L2	5.5
10.7	267	1280	3.3	CB215	T90L2	7.2
10.5	136	1339	4.6	110/215	T100A4	6.0
10.4	90	1550	6.6	CB250	T100BL6	16
10.2	140	1338	2.8	85/180	T100A4	3.4
10.2	140	1338	2.8	110/180	T100A4	6.0
10.2	140	1379	2.7	130/180	T100A4	9.1
10.2	140	1317	2.0	85/150	T100A4	3.4
10.2	140	1338	2.0	110/150	T100A4	6.0
10.2	140	1276	1.3	70/130	T100A4	2.5
10.2	140	1276	1.3	85/130	T100A4	3.4
10.2	140	1255	0.8	70/110	T100A4	2.5
10.2	140	1255	0.8	85/110	T100A4	2.5
9.9	144	1502	1.7	CB150	T100A4	5.1
9.9	144	1481	1.1	CB130	T100A4	3.7
9.9	288	1316	1.6	CB150	T90L2	3.9
9.9	288	1295	1.0	CB130	T90L2	2.9
9.9	145	1577	5.8	CB250	T100A4	15
9.8	290	1389	5.2	CB250	T90L2	11
9.8	146	1567	4.0	CB215	T100A4	9.3
9.6	100	1269	0.9	R150	T112A6	3.5
9.6	100	1204	0.7	R130	T112A6	2.4
9.5	150	1587	2.4	CB180	T100A4	7.3
9.5	300	1460	3.2	CB215	T90L2	7.4
9.4	100	1296	0.9	R150	T100BL6	3.5
9.4	100	1229	0.6	R130	T100BL6	2.4
9.4	304	1389	2.1	CB180	T90L2	5.4
9.0	107	1663	2.3	CB180	T112A6	7.0
8.8	162	1499	1.5	CB150	T100A4	4.0
8.8	162	1476	0.9	CB130	T100A4	3.0
8.8	323	1453	1.2	CB150	T90L2	3.8
8.8	323	1405	0.8	CB130	T90L2	2.7
8.8	109	1836	5.7	CB250	T112A6	16
8.8	107	1697	2.3	CB180	T100BL6	7.0
8.7	110	1516	0.7	CB110	T112A6	2.4
8.6	109	1877	5.6	CB250	T100BL6	16
8.6	112	1814	4.0	CB215	T112A6	9.6
8.6	110	1548	0.6	CB110	T100BL6	2.4
8.4	112	1853	3.9	CB215	T100BL6	9.6
8.4	115	1761	1.5	CB150	T112A6	4.9
8.4	115	1736	1.0	CB130	T112A6	3.4
8.2	174	1610	3.5	CB215	T100A4	6.8
8.2	174	1661	2.0	CB180	T100A4	5.8
8.2	115	1800	1.5	CB150	T100BL6	4.9
8.2	115	1774	1.0	CB130	T100BL6	3.4
8.1	177	1872	4.5	CB250	T100A4	14
8.0	120	1917	5.0	CB250	T112A6	14
7.9	121	1908	3.4	CB215	T112A6	8.9
7.9	360	1698	4.4	CB250	T90L2	11
7.8	120	1959	4.9	CB250	T100BL6	14
7.8	121	1947	3.4	CB215	T100BL6	8.9
7.7	124	1927	2.1	CB180	T112A6	7.0
7.7	368	1656	1.9	CB180	T90L2	5.2
7.6	375	1742	2.7	CB215	T90L2	6.8
7.6	124	1968	2.0	CB180	T100BL6	7.0
7.3	195	1863	3.6	110/215	T100A4	5.6
7.2	200	1763	5.5	130/250	T100A4	8.4
7.2	200	1822	2.2	85/180	T100A4	3.2
7.2	200	1851	2.2	110/180	T100A4	5.6
7.2	200	1881	2.2	130/180	T100A4	8.4
7.2	200	1793	1.6	85/150	T100A4	3.2
7.2	200	1822	1.6	110/150	T100A4	5.6
7.2	200	1734	1.0	70/130	T100A4	2.2
7.2	200	1763	1.0	85/130	T100A4	3.2
7.1	202	1840	1.3	CB150	T100A4	3.9

1.7 - Motoriduttori

n_2 min^{-1}	ir	T2 Nm	FS'		2.2 kW	Ptn kW
7.1	202	1810	0.8	CB130	T100A4	2.9
7.1	403	1783	1.1	CB150	T90L2	3.7
7.1	403	1724	0.7	CB130	T90L2	2.7
6.9	207	1976	4.2	CB250	T100A4	11
6.8	420	1888	1.6	CB180	T90L2	5.2
6.7	213	2004	2.5	CB215	T100A4	7.0
6.7	213	1910	1.7	CB180	T100A4	5.2
6.7	144	2205	1.3	CB150	T112A6	4.9
6.7	144	2143	0.8	CB130	T112A6	3.3
6.7	428	1924	2.3	CB215	T90L2	6.4
6.6	145	2285	4.4	CB250	T112A6	14
6.6	146	2267	3.0	CB215	T112A6	8.6
6.6	434	1823	1.5	CB180	T90L2	4.7
6.6	435	2021	3.4	CB250	T90L2	10
6.5	144	2252	1.3	CB150	T100BL6	4.9
6.5	144	2188	0.8	CB130	T100BL6	3.3
6.5	145	2335	4.3	CB250	T100BL6	14
6.4	146	2316	3.0	CB215	T100BL6	8.6
6.4	150	2298	1.8	CB180	T112A6	6.8
6.3	150	2345	1.8	CB180	T100BL6	6.8
6.2	231	2036	1.2	CB150	T100A4	3.7
6.2	231	1969	0.8	CB130	T100A4	2.7
6.0	240	2256	3.8	CB250	T100A4	11
5.9	162	2161	1.1	CB150	T112A6	3.8
5.9	162	2091	0.7	CB130	T112A6	2.6
5.8	162	2210	1.1	CB150	T100BL6	3.8
5.8	162	2137	0.7	CB130	T100BL6	2.6
5.8	248	2294	2.3	CB215	T100A4	6.8
5.8	248	2185	1.6	CB180	T100A4	5.1
5.7	504	2045	0.8	CB150	T90L2	3.3
5.6	508	2135	2.4	CB250	T90L2	8.8
5.5	174	2398	2.6	CB215	T112A6	6.8
5.5	174	2398	1.5	CB180	T112A6	5.5
5.5	518	2292	2.0	CB215	T90L2	6.3
5.5	261	2262	1.5	CB180	T100A4	5.0
5.4	525	2167	1.3	CB180	T90L2	4.6
5.4	177	2714	3.4	CB250	T112A6	13
5.4	174	2451	2.5	CB215	T100BL6	6.8
5.4	174	2451	1.5	CB180	T100BL6	5.5
5.4	267	2391	2.1	CB215	T100A4	6.4
5.3	177	2770	3.4	CB250	T100BL6	13
5.1	280	2261	1.6	85/180	T100A4	3.2
5.1	280	2261	1.6	110/180	T100A4	5.6
5.1	280	2344	1.6	130/180	T100A4	8.4
5.1	280	2179	1.2	85/150	T100A4	3.2
5.1	280	2220	1.1	110/150	T100A4	5.6
5.1	280	2097	0.8	85/130	T100A4	3.2
5.1	280	2097	0.8	70/130	T100A4	2.2
5.0	573	2325	2.4	CB250	T90L2	8.4
5.0	288	2495	1.0	CB150	T100A4	3.6
5.0	288	2409	0.7	CB130	T100A4	2.6
5.0	576	2250	0.7	CB150	T90L2	3.2
4.9	290	2642	3.2	CB250	T100A4	11
4.9	293	2626	2.7	110/215	T100A4	5.6
4.8	300	2687	3.9	130/250	T100A4	8.4
4.8	300	2731	2.0	CB215	T100A4	6.6
4.8	600	2345	1.8	CB215	T90L2	5.3
4.8	600	2388	1.1	CB180	T90L2	4.4
4.8	202	2654	1.0	CB150	T112A6	3.7
4.8	202	2566	0.6	CB130	T112A6	2.5
4.7	304	2593	1.4	CB180	T100A4	4.9
4.7	202	2710	0.9	CB150	T100BL6	3.7
4.7	202	2621	0.6	CB130	T100BL6	2.5
4.6	207	2853	3.2	CB250	T112A6	10
4.5	207	2916	3.1	CB250	T100BL6	10
4.5	213	2888	2.0	CB215	T112A6	6.6
4.5	213	2748	1.3	CB180	T112A6	5.0
4.4	323	2751	0.8	CB150	T100A4	3.5
4.4	213	2954	1.9	CB215	T100BL6	6.6
4.4	213	2811	1.3	CB180	T100BL6	5.0
4.2	231	2929	0.9	CB150	T112A6	3.5
4.1	231	2994	0.9	CB150	T100BL6	3.5
4.0	710	2882	2.0	CB250	T90L2	8.4
4.0	240	3309	2.8	CB250	T112A6	10
4.0	360	3228	2.8	CB250	T100A4	9.7
3.9	240	3377	2.8	CB250	T100BL6	10
3.9	368	3078	1.2	CB180	T100A4	4.7
3.9	248	3312	1.8	CB215	T112A6	6.4
3.9	248	3148	1.2	CB180	T112A6	4.9
3.8	375	3254	1.7	CB215	T100A4	6.1

1.7 - *Gearmotors*

n_2 min^{-1}	ir	T2 Nm	FS'		2.2 kW	Ptn kW
3.8	750	2930	1.3	CB215	T90L2	5.3
3.8	750	2764	0.8	CB180	T90L2	4.1
3.8	248	3382	1.7	CB215	T100BL6	6.4
3.8	248	3215	1.2	CB180	T100BL6	4.9
3.7	261	3254	1.2	CB180	T112A6	4.7
3.7	390	3435	2.1	110/215	T100A4	4.4
3.6	267	3385	1.7	CB215	T112A6	6.0
3.6	261	3326	1.1	CB180	T100BL6	4.7
3.6	400	3110	3.4	130/250	T100A4	6.4
3.6	400	3404	1.4	110/180	T100A4	4.4
3.6	400	3287	1.3	85/180	T100A4	2.4
3.6	400	3462	1.3	130/180	T100A4	6.4
3.6	400	3227	0.9	85/150	T100A4	2.4
3.6	400	3346	0.9	110/150	T100A4	4.4
3.6	403	3315	0.7	CB150	T100A4	3.4
3.5	267	3462	1.6	CB215	T100BL6	6.0
3.4	420	3523	1.0	CB180	T100A4	4.7
3.3	428	3586	1.4	CB215	T100A4	5.8
3.3	288	3596	0.8	CB150	T112A6	3.4
3.3	290	3809	2.5	CB250	T112A6	10
3.3	435	3768	2.2	CB250	T100A4	9.2
3.3	434	3385	0.9	CB180	T100A4	4.3
3.3	288	3673	0.7	CB150	T100BL6	3.4
3.2	290	3891	2.4	CB250	T100BL6	10
3.2	300	3939	1.5	CB215	T112A6	6.3
3.2	304	3723	1.0	CB180	T112A6	4.6
3.1	300	4028	1.5	CB215	T100BL6	6.3
3.1	304	3808	1.0	CB180	T100BL6	4.6
2.8	508	3963	1.6	CB250	T100A4	8.1
2.8	518	4262	1.2	CB215	T100A4	5.7
2.7	525	4016	0.8	CB180	T100A4	4.3
2.7	360	4643	2.1	CB250	T112A6	9.2
2.6	360	4750	2.1	CB250	T100BL6	9.2
2.6	368	4428	0.9	CB180	T112A6	4.5
2.6	375	4678	1.3	CB215	T112A6	5.8
2.6	368	4532	0.9	CB180	T100BL6	4.5
2.5	375	4771	1.3	CB215	T100BL6	5.8
2.5	573	4287	1.6	CB250	T100A4	7.7
2.4	600	4061	2.5	130/250	T100A4	6.8
2.4	600	4502	1.4	110/215	T100A4	4.6
2.4	600	4326	1.1	CB215	T100A4	4.9
2.4	600	4060	1.0	85/180	T100A4	2.7
2.4	600	4149	1.0	110/180	T100A4	4.6
2.4	600	4237	1.0	130/180	T100A4	6.8
2.4	600	3972	0.7	85/150	T100A4	2.7
2.4	600	4062	0.7	110/150	T100A4	4.6
2.4	600	4504	0.7	CB180	T100A4	4.2
2.3	420	5046	0.8	CB180	T112A6	4.5
2.2	428	5065	1.1	CB215	T112A6	5.4
2.2	420	5159	0.8	CB180	T100BL6	4.5
2.2	435	5419	1.6	CB250	T112A6	8.8
2.2	434	4848	0.7	CB180	T112A6	4.2
2.2	428	5157	1.1	CB215	T100BL6	5.4
2.2	434	4937	0.7	CB180	T100BL6	4.2
2.2	435	5545	1.6	CB250	T100BL6	8.8
2.0	710	5330	1.2	CB250	T100A4	7.7
1.9	750	5390	0.8	CB215	T100A4	4.9
1.9	508	5670	1.2	CB250	T112A6	7.7
1.9	508	5791	1.2	CB250	T100BL6	7.7
1.9	518	6020	1.0	CB215	T112A6	5.3
1.8	525	5739	0.6	CB180	T112A6	4.1
1.8	518	6151	0.9	CB215	T100BL6	5.3
1.8	525	5868	0.6	CB180	T100BL6	4.1
1.7	573	6129	1.2	CB250	T112A6	7.4
1.6	573	6278	1.2	CB250	T100BL6	7.4
1.6	600	6172	0.9	CB215	T112A6	4.7
1.6	600	6290	0.8	CB215	T100BL6	4.7
1.5	956	6723	1.1	110/215	T100A4	2.7
1.5	980	6908	1.5	130/250	T100A4	3.6
1.5	980	6765	0.7	110/180	T100A4	2.7
1.5	980	6908	0.7	130/180	T100A4	3.6
1.4	710	7313	1.0	CB250	T112A6	7.2
1.3	710	7481	1.0	CB250	T100BL6	7.2
1.3	750	7717	0.6	CB215	T112A6	4.7
1.3	750	7903	0.6	CB215	T100BL6	4.7
1.0	1372	9496	0.8	110/215	T100A4	2.7
1.0	1446	8701	1.2	130/250	T100A4	3.6
0.7	1960	11225	0.9	130/250	T100A4	3.6
0.7	1960	11226	0.6	110/215	T100A4	2.7
0.5	2800	15650	0.7	130/250	T100A4	3.3

1.7 - Getriebemotoren

n_2 min^{-1}	ir	T2 Nm	FS'		3.0 kW	Ptn kW
576	5	43.8	1.8	R63	T90LB2	2.5
416	7	59.3	5.8	R110	T100A2	6.0
416	7	59.3	3.0	R85	T100A2	3.4
416	7	59.3	1.6	R70	T100A2	2.5
411	7	59.9	3.0	R85	T90LB2	3.4
411	7	59.9	1.6	R70	T90LB2	2.5
411	7	59.9	1.4	R63	T90LB2	2.2
291	10	83.7	4.7	R110	T100A2	5.6
291	10	83.7	2.5	R85	T100A2	3.2
291	10	82.7	1.3	R70	T100A2	2.2
288	10	84.6	2.4	R85	T90LB2	3.2
288	10	83.6	1.3	R70	T90LB2	2.2
288	10	83.6	1.1	R63	T90LB2	2.0
204	7	123.4	5.7	R130	T100B4	9.1
204	7	120.6	4.0	R110	T100B4	6.0
204	7	119.2	2.1	R85	T100B4	3.4
204	7	119.2	1.1	R70	T100B4	2.5
194	15	124.1	5.0	R130	T100A2	6.8
194	15	122.6	3.2	R110	T100A2	4.6
194	15	121.1	1.7	R85	T100A2	2.7
194	15	121.1	0.9	R70	T100A2	1.9
192	15	122.4	1.7	R85	T90LB2	2.7
192	15	122.4	0.9	R70	T90LB2	1.9
192	15	122.3	0.8	R63	T90LB2	1.7
146	20	165.4	6.5	R150	T100A2	9.3
146	20	163.4	4.2	R130	T100A2	6.4
146	20	161.5	2.9	R110	T100A2	4.4
146	20	159.5	1.5	R85	T100A2	2.4
144	20	161.2	1.5	R85	T90LB2	2.4
144	20	159.1	0.7	R70	T90LB2	1.7
144	20	159.2	0.7	R63	T90LB2	1.5
143	10	174.3	4.5	R130	T100B4	8.4
143	10	170.3	3.2	R110	T100B4	5.6
143	10	168.3	1.7	R85	T100B4	3.2
143	10	166.3	0.9	R70	T100B4	2.2
139	7	179.9	4.8	R130	T132S6	8.4
139	7	175.7	3.3	R110	T132S6	5.6
137	7	181.7	4.7	R130	T112B6	8.4
137	7	177.6	3.2	R110	T112B6	5.6
137	7	175.5	1.7	R85	T112B6	3.2
137	7	175.5	0.9	R70	T112B6	2.4
104	28	212.3	4.5	R150	T100A2	6.2
104	28	209.5	2.9	R130	T100A2	4.5
104	28	212.3	2.0	R110	T100A2	3.3
104	28	206.8	1.0	R85	T100A2	1.8
103	28	208.9	1.0	R85	T90LB2	1.8
97	10	254.0	5.6	R150	T132S6	11
97	10	251.1	3.8	R130	T132S6	7.2
97	10	248.1	2.6	R110	T132S6	5.2
96	10	256.7	5.5	R150	T112B6	11
96	10	253.7	3.7	R130	T112B6	7.2
96	10	250.7	2.6	R110	T112B6	5.2
96	10	247.7	1.3	R85	T112B6	3.0
96	10	244.7	0.7	R70	T112B6	2.1
95	15	255.4	5.0	R150	T100B4	9.9
95	15	252.5	3.3	R130	T100B4	6.8
95	15	246.4	2.2	R110	T100B4	4.6
95	15	243.4	1.2	R85	T100B4	2.7
95	15	240.5	0.6	R70	T100B4	1.9
73	40	319.0	5.3	CB150	T100A2	7.8
73	40	299.3	3.6	R150	T100A2	6.0
73	40	315.0	3.5	CB130	T100A2	5.6
73	40	291.4	2.4	R130	T100A2	4.0
73	40	291.4	1.7	R110	T100A2	3.0
73	40	283.6	0.9	R85	T100A2	1.6
72	40	322.3	5.2	CB150	T90LB2	7.8
72	40	318.3	3.5	CB130	T90LB2	5.6
72	40	294.4	1.7	R110	T90LB2	3.0
72	40	286.5	0.8	R85	T90LB2	1.6
72	20	336.6	4.2	R150	T100B4	9.3
72	20	332.6	2.8	R130	T100B4	6.4
72	20	324.6	1.9	R110	T100B4	4.4
72	20	316.5	1.0	R85	T100B4	2.4
68	43	338.7	1.9	CB110	T100A2	4.2
67	43	342.2	1.8	CB110	T90LB2	4.2
67	43	338.0	1.0	CB85	T90LB2	2.4
65	15	376.6	5.7	R180	T132S6	14
65	15	367.7	4.1	R150	T132S6	8.8
65	15	367.7	2.7	R130	T132S6	6.4
65	15	354.4	1.8	R110	T132S6	4.2
64	15	371.6	4.0	R150	T112B6	8.8

1.7 - Motoriduttori

n_2 min^{-1}	ir	T2 Nm	FS'		3.0 kW	Ptn kW
64	15	371.5	2.7	R130	T112B6	6.4
64	15	358.1	1.8	R110	T112B6	4.2
64	15	353.6	0.9	R85	T112B6	2.4
59	49	357.0	2.9	R150	T100A2	5.5
59	49	347.3	2.0	R130	T100A2	3.6
59	49	347.3	1.3	R110	T100A2	2.7
59	49	350.9	1.3	R110	T90LB2	2.7
59	49	341.3	0.7	R85	T90LB2	1.6
58	50	393.8	4.6	CB150	T100A2	7.4
58	50	388.9	3.1	CB130	T100A2	5.3
58	50	397.9	4.6	CB150	T90LB2	7.4
58	50	392.9	3.0	CB130	T90LB2	5.3
57	51	401.7	1.6	CB110	T100A2	4.2
56	51	405.9	1.6	CB110	T90LB2	4.2
56	51	400.9	0.8	CB85	T90LB2	2.4
56	52	414.7	6.4	CB180	T100A2	11
55	52	419.0	6.3	CB180	T90LB2	11
52	56	408.0	2.5	R150	T100A2	5.5
52	56	397.0	1.6	R130	T100A2	3.5
52	56	391.5	0.9	R110	T100A2	2.7
51	56	395.5	0.9	R110	T90LB2	2.7
51	28	426.3	3.0	R150	T100B4	6.2
51	28	426.4	1.9	R130	T100B4	4.5
51	28	420.8	1.4	R110	T100B4	3.3
51	28	403.8	0.7	R85	T100B4	1.8
50	58	451.1	4.0	CB150	T100A2	7.1
50	58	451.2	2.7	CB130	T100A2	5.3
50	58	455.8	4.0	CB150	T90LB2	7.1
50	58	455.8	2.6	CB130	T90LB2	5.3
49	59	464.7	1.5	CB110	T100A2	4.2
49	59	469.6	1.4	CB110	T90LB2	4.2
49	59	463.8	0.8	CB85	T90LB2	2.4
49	20	490.3	4.9	R180	T132S6	12
49	20	484.4	3.5	R150	T132S6	8.3
49	20	484.4	2.2	R130	T132S6	6.0
48	20	489.4	3.4	R150	T112B6	8.3
48	20	489.4	2.2	R130	T112B6	6.0
48	20	471.5	1.5	R110	T112B6	4.0
48	20	459.6	0.8	R85	T112B6	2.2
47	62	488.3	5.3	CB180	T100A2	10
46	62	493.4	5.3	CB180	T90LB2	10
42	69	536.7	1.3	CB110	T100A2	4.2
42	69	542.3	1.3	CB110	T90LB2	4.2
42	69	535.3	0.7	CB85	T90LB2	2.4
42	70	482.5	1.9	R150	T100A2	4.5
42	70	475.6	1.3	R130	T100A2	3.3
42	70	468.6	0.8	R110	T100A2	2.3
41	70	473.5	0.8	R110	T90LB2	2.3
40	72	560.0	3.5	CB150	T100A2	7.1
40	72	552.9	2.3	CB130	T100A2	5.1
40	72	565.9	3.4	CB150	T90LB2	7.1
40	72	558.7	2.3	CB130	T90LB2	5.1
39	75	583.3	4.7	CB180	T100A2	9.7
39	37	593.0	5.0	CB180	T100B4	10
38	75	589.4	4.7	CB180	T90LB2	9.7
36	80	543.4	1.6	R150	T100A2	4.4
36	80	567.1	1.2	CB110	T100A2	3.2
36	80	535.5	1.2	R130	T100A2	3.0
36	80	519.8	0.8	R110	T100A2	2.2
36	80	572.9	1.2	CB110	T90LB2	3.2
36	80	525.1	0.7	R110	T90LB2	2.2
36	40	633.1	3.3	CB150	T100B4	7.1
36	40	601.0	2.3	R150	T100B4	6.0
36	40	625.1	2.2	CB130	T100B4	5.1
36	40	585.0	1.5	R130	T100B4	4.0
36	40	577.0	1.1	R110	T100B4	3.0
35	28	694.7	4.6	R215	T132S6	16
35	28	636.8	3.5	R180	T132S6	9.0
35	28	612.1	2.5	R150	T132S6	5.7
35	28	620.3	1.5	R130	T132S6	4.3
34	28	618.3	2.4	R150	T112B6	5.7
34	28	626.6	1.5	R130	T112B6	4.3
34	28	601.6	1.1	R110	T112B6	3.0
34	85	635.9	4.3	CB180	T100A2	8.5
34	85	635.9	3.0	CB150	T100A2	6.2
34	85	619.2	1.9	CB130	T100A2	4.3
34	85	642.7	4.2	CB180	T90LB2	8.5
34	85	642.7	2.9	CB150	T90LB2	6.2
34	85	625.8	1.9	CB130	T90LB2	4.3
33	43	671.8	1.1	CB110	T100B4	3.8

1.7 - *Gearmotors*

n_2 min^{-1}	ir	T2 Nm	FS'		3.0 kW	Ptn kW
29	49	697.1	1.9	R150	T100B4	5.5
29	49	687.3	1.3	R130	T100B4	3.6
29	49	677.4	0.9	R110	T100B4	2.7
29	100	649.7	1.3	R150	T100A2	3.9
29	100	630.2	0.9	R130	T100A2	2.7
29	50	781.3	2.8	CB150	T100B4	6.7
29	50	781.4	1.9	CB130	T100B4	5.1
28	51	796.9	1.0	CB110	T100B4	3.8
28	52	823.0	4.0	CB180	T100B4	9.7
27	107	790.0	3.7	CB180	T100A2	8.2
27	107	798.2	3.6	CB180	T90LB2	8.2
26	110	779.9	0.9	CB110	T100A2	3.2
26	37	852.3	3.9	CB180	T132S6	9.3
26	110	788.0	0.9	CB110	T90LB2	3.2
26	112	860.2	6.2	CB215	T100A2	11
26	37	861.1	3.9	CB180	T112B6	9.3
26	112	869.2	6.1	CB215	T90LB2	11
26	56	818.8	1.6	R150	T100B4	5.5
26	56	774.0	1.1	R130	T100B4	3.5
26	56	774.1	0.6	R110	T100B4	2.7
25	115	849.3	2.4	CB150	T100A2	5.9
25	115	826.7	1.6	CB130	T100A2	4.2
25	115	858.1	2.4	CB150	T90LB2	5.9
25	115	835.3	1.6	CB130	T90LB2	4.2
25	58	894.6	2.5	CB150	T100B4	6.4
25	58	894.7	1.6	CB130	T100B4	4.9
24	40	909.7	6.4	R250	T132S6	17
24	40	909.7	4.0	R215	T132S6	11
24	40	862.4	2.7	R180	T132S6	7.7
24	40	921.5	2.5	CB150	T132S6	6.7
24	40	862.4	1.9	R150	T132S6	5.5
24	40	909.6	1.7	CB130	T132S6	4.7
24	40	838.9	1.2	R130	T132S6	3.7
24	59	898.3	1.0	CB110	T100B4	3.8
24	121	905.4	5.5	CB215	T100A2	10
24	40	931.1	2.5	CB150	T112B6	6.7
24	40	871.5	1.9	R150	T112B6	5.5
24	40	919.2	1.7	CB130	T112B6	4.7
24	40	847.5	1.2	R130	T112B6	3.7
24	40	811.7	0.9	R110	T112B6	2.6
24	121	914.9	5.4	CB215	T90LB2	10
23	124	915.6	3.3	CB180	T100A2	8.2
23	124	925.0	3.3	CB180	T90LB2	8.2
23	42	967.4	6.2	CB215	T132S6	11
23	62	969.1	6.0	CB215	T100B4	11
23	62	969.1	3.3	CB180	T100B4	9.3
23	42	977.6	6.1	CB215	T112B6	11
23	129	901.6	0.8	CB110	T100A2	3.2
22	43	975.2	0.9	CB110	T112B6	3.8
22	129	911.0	0.8	CB110	T90LB2	3.2
21	69	1051	0.8	CB110	T100B4	3.8
20	70	940	1.3	R150	T100B4	4.5
20	70	940	0.9	R130	T100B4	3.3
20	144	1049	2.1	CB150	T100A2	5.7
20	144	1021	1.4	CB130	T100A2	4.0
20	144	1060	2.1	CB150	T90LB2	5.7
20	144	1032	1.3	CB130	T90LB2	4.0
19.9	146	1093	4.8	CB215	T100A2	10
19.9	72	1111	2.1	CB150	T100B4	6.4
19.9	72	1097	1.4	CB130	T100B4	4.7
19.8	49	1085	5.3	R250	T132S6	16
19.8	49	1042	2.3	R180	T132S6	7.4
19.8	49	999	1.5	R150	T132S6	4.8
19.7	146	1104	4.7	CB215	T90LB2	10
19.6	49	1009	1.5	R150	T112B6	4.8
19.6	49	1009	1.0	R130	T112B6	3.5
19.6	49	965	0.7	R110	T112B6	2.5
19.4	50	1093	3.3	R215	T132S6	9.9
19.4	150	1093	2.9	CB180	T100A2	7.9
19.4	50	1137	2.2	CB150	T132S6	6.4
19.4	50	1137	1.4	CB130	T132S6	4.5
19.2	150	1104	2.9	CB180	T90LB2	7.9
19.2	50	1149	2.2	CB150	T112B6	6.4
19.2	50	1149	1.4	CB130	T112B6	4.5
19.1	75	1172	5.2	CB215	T100B4	11
19.1	75	1157	2.9	CB180	T100B4	8.9
18.8	51	1127	0.9	CB110	T112B6	3.4
18.7	52	1198	3.0	CB180	T132S6	9.3
18.5	52	1211	3.0	CB180	T112B6	9.3
18.3	53	1206	5.2	CB215	T132S6	11

1.7 - Getriebemotoren

n_2 min^{-1}	ir	T2 Nm	FS'		3.0 kW	Ptn kW
18.1	53	1218	5.2	CB215	T112B6	11
18.0	162	1069	1.7	CB150	T100A2	4.5
18.0	162	1037	1.1	CB130	T100A2	3.2
17.9	80	1218	4.8	CB215	T100B4	10
17.9	80	1057	1.1	R150	T100B4	4.4
17.9	80	1026	0.8	R130	T100B4	3.0
17.9	80	1106	0.7	CB110	T100B4	2.9
17.8	162	1080	1.7	CB150	T90LB2	4.5
17.8	162	1047	1.1	CB130	T90LB2	3.2
17.3	56	1175	2.1	R180	T132S6	7.2
17.3	56	1125	1.3	R150	T132S6	4.7
17.3	168	1092	0.6	CB110	T100A2	2.6
17.1	56	1137	1.3	R150	T112B6	4.7
17.1	56	1137	0.8	R130	T112B6	3.4
17.1	168	1103	0.6	CB110	T90LB2	2.6
17.0	57	1195	2.9	R215	T132S6	8.8
16.8	85	1260	2.6	CB180	T100B4	7.9
16.8	85	1243	1.8	CB150	T100B4	5.5
16.8	85	1226	1.2	CB130	T100B4	4.0
16.7	174	1080	4.3	CB215	T100A2	6.8
16.7	174	1165	2.4	CB180	T100A2	6.4
16.7	58	1302	1.9	CB150	T132S6	6.2
16.7	58	1302	1.2	CB130	T132S6	4.3
16.6	174	1091	4.3	CB215	T90LB2	6.8
16.6	174	1177	2.4	CB180	T90LB2	6.4
16.6	58	1316	1.9	CB150	T112B6	6.2
16.6	58	1316	1.2	CB130	T112B6	4.3
16.4	177	1290	5.5	CB250	T100A2	15
16.3	177	1303	5.4	CB250	T90LB2	15
16.3	59	1303	0.8	CB110	T112B6	3.4
16.2	60	1311	4.2	R250	T132S6	15
15.9	90	1406	6.5	CB250	T100B4	17
15.7	62	1428	6.5	CB250	T132S6	17
15.7	62	1410	4.6	CB215	T132S6	11
15.7	62	1410	2.5	CB180	T132S6	8.9
15.5	62	1444	6.5	CB250	T112B6	17
15.5	62	1425	4.6	CB215	T112B6	11
15.5	62	1425	2.5	CB180	T112B6	8.9
14.4	202	1312	1.5	CB150	T100A2	4.4
14.4	202	1273	1.0	CB130	T100A2	3.1
14.3	100	1242	0.8	R150	T100B4	3.9
14.3	202	1326	1.5	CB150	T90LB2	4.4
14.3	202	1286	1.0	CB130	T90LB2	3.1
14.1	207	1386	5.0	CB250	T100A2	12
14.1	69	1447	2.5	R215	T132S6	8.8
13.9	207	1401	4.9	CB250	T90LB2	12
13.9	69	1524	0.7	CB110	T112B6	3.4
13.9	70	1406	3.6	R250	T132S6	12
13.9	70	1364	1.6	R180	T132S6	6.1
13.9	70	1303	1.0	R150	T132S6	4.0
13.7	70	1316	1.0	R150	T112B6	4.0
13.7	70	1296	0.7	R130	T112B6	2.9
13.7	213	1426	3.0	CB215	T100A2	7.8
13.7	213	1363	2.0	CB180	T100A2	5.8
13.5	213	1441	3.0	CB215	T90LB2	7.8
13.5	213	1378	2.0	CB180	T90LB2	5.8
13.5	72	1595	1.6	CB150	T132S6	5.9
13.5	72	1595	1.1	CB130	T132S6	4.2
13.4	107	1566	2.2	CB180	T100B4	7.6
13.3	72	1612	1.6	CB150	T112B6	5.9
13.3	72	1612	1.1	CB130	T112B6	4.2
13.1	109	1703	5.6	CB250	T100B4	17
13.0	110	1455	0.6	CB110	T100B4	2.9
12.9	75	1684	4.1	CB215	T132S6	10
12.9	75	1684	2.2	CB180	T132S6	8.5
12.8	75	1701	4.0	CB215	T112B6	10
12.8	75	1701	2.2	CB180	T112B6	8.5
12.8	112	1683	3.8	CB215	T100B4	10
12.6	231	1455	1.4	CB150	T100A2	4.1
12.6	231	1410	0.9	CB130	T100A2	3.0
12.5	231	1470	1.3	CB150	T90LB2	4.1
12.5	231	1424	0.9	CB130	T90LB2	3.0
12.4	78	1773	5.5	CB250	T132S6	16
12.4	115	1660	1.5	CB150	T100B4	5.3
12.4	115	1637	0.9	CB130	T100B4	3.9
12.3	78	1792	5.5	CB250	T112B6	16
12.3	79	1563	2.9	R250	T132S6	12
12.1	240	1584	4.5	CB250	T100A2	11
12.1	80	1773	3.7	CB215	T132S6	10
12.1	80	1513	2.1	R215	T132S6	7.1

1.7 - Motoriduttori

n_2 min^{-1}	ir	T2 Nm	FS'		3.0 kW	Ptn kW
12.1	80	1537	1.4	R180	T132S6	5.9
12.1	80	1466	0.9	R150	T132S6	3.9
12.0	240	1600	4.5	CB250	T90LB2	11
12.0	80	1791	3.6	CB215	T112B6	10
12.0	80	1480	0.9	R150	T112B6	3.9
12.0	80	1433	0.6	R130	T112B6	2.7
11.9	120	1779	4.9	CB250	T100B4	15
11.8	121	1794	3.3	CB215	T100B4	9.6
11.7	248	1637	2.7	CB215	T100A2	7.6
11.7	248	1563	1.9	CB180	T100A2	5.7
11.6	248	1653	2.7	CB215	T90LB2	7.6
11.6	248	1579	1.8	CB180	T90LB2	5.7
11.5	124	1789	2.0	CB180	T100B4	7.3
11.4	85	1808	2.0	CB180	T132S6	7.3
11.4	85	1808	1.4	CB150	T132S6	5.3
11.4	85	1758	0.9	CB130	T132S6	3.5
11.3	85	1827	2.0	CB180	T112B6	7.3
11.3	85	1827	1.4	CB150	T112B6	5.3
11.3	85	1776	0.9	CB130	T112B6	3.5
11.2	261	1619	1.8	CB180	T100A2	5.5
11.0	261	1636	1.7	CB180	T90LB2	5.5
10.9	267	1709	2.5	CB215	T100A2	7.2
10.8	267	1726	2.5	CB215	T90LB2	7.2
10.8	90	2047	5.0	CB250	T132S6	16
10.7	90	2068	4.9	CB250	T112B6	16
10.5	136	1827	3.3	110/215	T100B4	6.0
10.2	140	1824	4.9	130/250	T100B4	9.1
10.2	140	1824	2.1	110/180	T100B4	6.0
10.2	140	1824	2.1	85/180	T100B4	3.4
10.2	140	1880	2.0	130/180	T100B4	9.1
10.2	140	1796	1.5	85/150	T100B4	3.4
10.2	140	1824	1.4	110/150	T100B4	6.0
10.2	140	1740	1.0	70/130	T100B4	2.5
10.2	140	1740	1.0	85/130	T100B4	3.4
10.1	288	1759	1.2	CB150	T100A2	3.9
10.1	288	1731	0.8	CB130	T100A2	2.9
10.0	290	1857	3.9	CB250	T100A2	11
10.0	288	1776	1.2	CB150	T90LB2	3.9
10.0	288	1748	0.8	CB130	T90LB2	2.9
9.9	290	1875	3.8	CB250	T90LB2	11
9.9	144	2048	1.3	CB150	T100B4	5.1
9.9	144	2019	0.8	CB130	T100B4	3.7
9.9	98	1939	2.3	R250	T132S6	12
9.9	145	2150	4.2	CB250	T100B4	15
9.8	146	2136	2.9	CB215	T100B4	9.3
9.7	300	1949	2.4	CB215	T100A2	7.4
9.7	100	1890	1.6	R215	T132S6	7.1
9.7	100	1802	1.0	R180	T132S6	5.3
9.7	100	1713	0.7	R150	T132S6	3.5
9.6	300	1970	2.4	CB215	T90LB2	7.4
9.6	100	1731	0.7	R150	T112B6	3.5
9.6	304	1856	1.6	CB180	T100A2	5.4
9.5	150	2165	1.8	CB180	T100B4	7.3
9.5	304	1876	1.6	CB180	T90LB2	5.4
9.1	107	2243	1.7	CB180	T132S6	7.0
9.0	323	1940	0.9	CB150	T100A2	3.8
9.0	107	2268	1.7	CB180	T112B6	7.0
8.9	323	1959	0.9	CB150	T90LB2	3.8
8.9	109	2479	4.2	CB250	T132S6	16
8.8	162	2044	1.1	CB150	T100B4	4.0
8.8	162	2012	0.7	CB130	T100B4	3.0
8.8	109	2504	4.2	CB250	T112B6	16
8.7	112	2448	2.9	CB215	T132S6	9.6
8.6	112	2474	2.9	CB215	T112B6	9.6
8.4	115	2379	1.1	CB150	T132S6	4.9
8.4	115	2345	0.7	CB130	T132S6	3.4
8.4	115	2402	1.1	CB150	T112B6	4.9
8.4	115	2367	0.7	CB130	T112B6	3.4
8.2	174	2196	2.5	CB215	T100B4	6.8
8.2	174	2265	1.5	CB180	T100B4	5.8
8.1	120	2589	3.7	CB250	T132S6	14
8.1	360	2269	3.3	CB250	T100A2	11
8.1	177	2553	3.3	CB250	T100B4	14
8.0	121	2572	2.6	CB215	T132S6	8.9
8.0	120	2614	3.7	CB250	T112B6	14
8.0	360	2292	3.3	CB250	T90LB2	11
7.9	121	2601	2.5	CB215	T112B6	8.9
7.9	368	2209	1.4	CB180	T100A2	5.2
7.8	368	2232	1.4	CB180	T90LB2	5.2
7.8	124	2601	1.5	CB180	T132S6	7.0

1.7 - *Gearmotors*

n_2 min^{-1}	ir	T2 Nm	FS'		3.0 kW	Ptn kW
7.8	375	2326	2.0	CB215	T100A2	6.8
7.7	124	2628	1.5	CB180	T112B6	7.0
7.7	375	2350	2.0	CB215	T90LB2	6.8
7.3	195	2541	2.6	110/215	T100B4	5.6
7.2	403	2381	0.8	CB150	T100A2	3.7
7.2	200	2404	4.1	130/250	T100B4	8.4
7.2	200	2484	1.6	85/180	T100B4	3.2
7.2	200	2525	1.6	110/180	T100B4	5.6
7.2	200	2565	1.6	130/180	T100B4	8.4
7.2	200	2444	1.2	85/150	T100B4	3.2
7.2	200	2484	1.1	110/150	T100B4	5.6
7.2	403	2404	0.8	CB150	T90LB2	3.7
7.2	200	2364	0.8	70/130	T100B4	2.2
7.2	200	2404	0.7	85/130	T100B4	3.2
7.1	202	2509	0.9	CB150	T100B4	3.9
6.9	420	2522	1.2	CB180	T100A2	5.2
6.9	207	2695	3.1	CB250	T100B4	11
6.9	420	2548	1.2	CB180	T90LB2	5.2
6.8	428	2570	1.7	CB215	T100A2	6.4
6.7	144	2976	1.0	CB150	T132S6	4.9
6.7	144	2890	0.6	CB130	T132S6	3.3
6.7	428	2597	1.7	CB215	T90LB2	6.4
6.7	213	2733	1.9	CB215	T100B4	7.0
6.7	213	2604	1.3	CB180	T100B4	5.2
6.7	434	2433	1.1	CB180	T100A2	4.7
6.7	145	3083	3.3	CB250	T132S6	14
6.7	435	2698	2.6	CB250	T100A2	10
6.7	144	3006	0.9	CB150	T112B6	4.9
6.7	144	2922	0.6	CB130	T112B6	3.3
6.6	146	3064	2.2	CB215	T132S6	8.6
6.6	434	2460	1.1	CB180	T90LB2	4.7
6.6	145	3116	3.2	CB250	T112B6	14
6.6	435	2726	2.6	CB250	T90LB2	10
6.6	146	3091	2.2	CB215	T112B6	8.6
6.5	150	3100	1.4	CB180	T132S6	6.8
6.4	150	3134	1.3	CB180	T112B6	6.8
6.2	231	2777	0.8	CB150	T100B4	3.7
6.0	162	2918	0.8	CB150	T132S6	3.8
6.0	240	3077	2.8	CB250	T100B4	11
5.9	162	2947	0.8	CB150	T112B6	3.8
5.8	248	3128	1.7	CB215	T100B4	6.8
5.8	248	2979	1.2	CB180	T100B4	5.1
5.8	504	2731	0.6	CB150	T100A2	3.3
5.7	508	2850	1.8	CB250	T100A2	8.8
5.7	504	2759	0.6	CB150	T90LB2	3.3
5.7	508	2880	1.8	CB250	T90LB2	8.8
5.6	518	3059	1.5	CB215	T100A2	6.3
5.6	174	3241	1.9	CB215	T132S6	6.8
5.6	174	3240	1.1	CB180	T132S6	5.5
5.6	518	3092	1.5	CB215	T90LB2	6.3
5.5	525	2896	1.0	CB180	T100A2	4.6
5.5	174	3270	1.9	CB215	T112B6	6.8
5.5	174	3270	1.1	CB180	T112B6	5.5
5.5	525	2923	1.0	CB180	T90LB2	4.6
5.5	177	3660	2.6	CB250	T132S6	13
5.5	261	3084	1.1	CB180	T100B4	5.0
5.4	177	3700	2.5	CB250	T112B6	13
5.4	267	3260	1.6	CB215	T100B4	6.4
5.1	280	3083	1.2	110/180	T100B4	5.6
5.1	280	3083	1.2	85/180	T100B4	3.2
5.1	280	3196	1.2	130/180	T100B4	8.4
5.1	280	2972	0.8	85/150	T100B4	3.2
5.1	280	3028	0.8	110/150	T100B4	5.6
5.1	573	3102	1.8	CB250	T100A2	8.4
5.0	573	3133	1.8	CB250	T90LB2	8.4
5.0	288	3402	0.7	CB150	T100B4	3.6
4.9	290	3603	2.4	CB250	T100B4	11
4.9	293	3581	2.0	110/215	T100B4	5.6
4.9	600	3131	1.3	CB215	T100A2	5.3
4.9	600	3191	0.8	CB180	T100A2	4.4
4.8	600	3164	1.3	CB215	T90LB2	5.3
4.8	600	3223	0.8	CB180	T90LB2	4.4
4.8	202	3581	0.7	CB150	T132S6	3.7
4.8	300	3664	2.9	130/250	T100B4	8.4
4.8	300	3724	1.5	CB215	T100B4	6.6
4.8	202	3620	0.7	CB150	T112B6	3.7
4.7	304	3536	1.0	CB180	T100B4	4.9
4.7	207	3848	2.4	CB250	T132S6	10
4.6	207	3890	2.3	CB250	T112B6	10
4.6	213	3904	1.4	CB215	T132S6	6.6

1.7 - Getriebemotoren

n_2 min^{-1}	ir	T2 Nm	FS'		3.0 kW	Ptn kW
4.6	213	3715	1.0	CB180	T132S6	5.0
4.5	213	3938	1.4	CB215	T112B6	6.6
4.5	213	3748	1.0	CB180	T112B6	5.0
4.2	231	3956	0.7	CB150	T132S6	3.5
4.2	231	3994	0.6	CB150	T112B6	3.5
4.1	710	3844	1.5	CB250	T100A2	8.4
4.1	710	3881	1.5	CB250	T90LB2	8.4
4.0	240	4467	2.1	CB250	T132S6	10
4.0	240	4513	2.1	CB250	T112B6	10
4.0	360	4402	2.0	CB250	T100B4	9.7
3.9	248	4470	1.3	CB215	T132S6	6.4
3.9	248	4250	0.9	CB180	T132S6	4.9
3.9	368	4198	0.9	CB180	T100B4	4.7
3.9	750	3913	1.0	CB215	T100A2	5.3
3.9	750	3692	0.6	CB180	T100A2	4.1
3.9	248	4516	1.3	CB215	T112B6	6.4
3.9	248	4293	0.9	CB180	T112B6	4.9
3.8	750	3954	1.0	CB215	T90LB2	5.3
3.8	750	3731	0.6	CB180	T90LB2	4.1
3.8	375	4437	1.2	CB215	T100B4	6.1
3.7	261	4390	0.9	CB180	T132S6	4.7
3.7	261	4437	0.8	CB180	T112B6	4.7
3.7	390	4683	1.5	110/215	T100B4	4.4
3.6	267	4578	1.2	CB215	T132S6	6.0
3.6	267	4616	1.2	CB215	T112B6	6.0
3.6	400	4241	2.5	130/250	T100B4	6.4
3.6	400	4642	1.0	110/180	T100B4	4.4
3.6	400	4482	1.0	85/180	T100B4	2.4
3.6	400	4721	1.0	130/180	T100B4	6.4
3.6	400	4401	0.7	85/150	T100B4	2.4
3.6	400	4562	0.6	110/150	T100B4	4.4
3.4	420	4803	0.8	CB180	T100B4	4.7
3.3	290	5146	1.8	CB250	T132S6	10
3.3	428	4890	1.0	CB215	T100B4	5.8
3.3	290	5194	1.8	CB250	T112B6	10
3.3	435	5138	1.6	CB250	T100B4	9.2
3.3	434	4616	0.7	CB180	T100B4	4.3
3.2	300	5321	1.1	CB215	T132S6	6.3
3.2	300	5372	1.1	CB215	T112B6	6.3
3.2	304	5030	0.8	CB180	T132S6	4.6
3.2	304	5076	0.8	CB180	T112B6	4.6
2.8	508	5404	1.1	CB250	T100B4	8.1
2.8	518	5812	0.9	CB215	T100B4	5.7
2.7	360	6284	1.6	CB250	T132S6	9.2
2.7	360	6331	1.5	CB250	T112B6	9.2
2.6	368	5969	0.7	CB180	T132S6	4.5
2.6	368	6038	0.7	CB180	T112B6	4.5
2.6	375	6306	1.0	CB215	T132S6	5.8
2.6	375	6380	0.9	CB215	T112B6	5.8
2.5	573	5845	1.1	CB250	T100B4	7.7
2.4	600	5538	1.9	130/250	T100B4	6.8
2.4	600	6139	1.0	110/215	T100B4	4.6
2.4	600	5900	0.8	CB215	T100B4	4.9
2.4	600	5537	0.8	85/180	T100B4	2.7
2.4	600	5657	0.7	110/180	T100B4	4.6
2.4	600	5778	0.7	130/180	T100B4	6.8
2.3	428	6814	0.8	CB215	T132S6	5.4
2.2	428	6907	0.8	CB215	T112B6	5.4
2.2	435	7323	1.2	CB250	T132S6	8.8
2.2	435	7390	1.2	CB250	T112B6	8.8
2.0	710	7269	0.9	CB250	T100B4	7.7
1.9	508	7651	0.9	CB250	T132S6	7.7
1.9	750	7351	0.6	CB215	T100B4	4.9
1.9	508	7732	0.9	CB250	T112B6	7.7
1.9	518	8121	0.7	CB215	T132S6	5.3
1.9	518	8209	0.7	CB215	T112B6	5.3
1.7	573	8307	0.9	CB250	T132S6	7.4
1.7	573	8358	0.9	CB250	T112B6	7.4
1.6	600	8314	0.6	CB215	T132S6	4.7
1.6	600	8416	0.6	CB215	T112B6	4.7
1.5	956	9168	0.8	110/215	T100B4	2.7
1.5	980	9420	1.1	130/250	T100B4	3.6
1.4	710	9829	0.7	CB250	T132S6	7.2
1.4	710	9973	0.7	CB250	T112B6	7.2
1.0	1446	11864	0.9	130/250	T100B4	3.6
0.73	1960	15306	0.7	130/250	T100B4	3.6

1.7 - Motoriduttori

n_2 min^{-1}	ir	T2 Nm	FS'		4.0 kW	Ptn kW
419	7	80.3	6.2	R130	T112A2	9.1
419	7	78.5	4.3	R110	T112A2	6.0
419	7	78.5	2.3	R85	T112A2	3.4
419	7	78.5	1.2	R70	T112A2	2.5
417	7	80.6	6.2	R130	T100B2	9.1
417	7	78.8	4.3	R110	T100B2	6.0
417	7	78.8	2.2	R85	T100B2	3.4
417	7	78.8	1.2	R70	T100B2	2.5
293	10	113.4	5.1	R130	T112A2	8.4
293	10	110.8	3.5	R110	T112A2	5.6
293	10	110.8	1.9	R85	T112A2	3.2
293	10	109.5	1.0	R70	T112A2	2.2
292	10	113.8	5.0	R130	T100B2	8.4
292	10	111.2	3.5	R110	T100B2	5.6
292	10	111.2	1.8	R85	T100B2	3.2
292	10	109.9	1.0	R70	T100B2	2.2
206	7	163.4	6.5	R150	T112A4	12
206	7	163.4	4.3	R130	T112A4	9.1
206	7	159.7	3.0	R110	T112A4	6.0
206	7	157.9	1.6	R85	T112A4	3.4
206	7	157.8	0.8	R70	T112A4	2.5
204	7	164.6	6.5	R150	T100BL4	12
204	7	164.5	4.3	R130	T100BL4	9.1
204	7	160.8	3.0	R110	T100BL4	6.0
204	7	158.9	1.6	R85	T100BL4	3.4
204	7	158.9	0.8	R70	T100BL4	2.5
195	15	166.2	5.6	R150	T112A2	9.9
195	15	164.3	3.8	R130	T112A2	6.8
195	15	162.3	2.4	R110	T112A2	4.6
195	15	160.4	1.3	R85	T112A2	2.7
195	15	160.4	0.7	R70	T112A2	1.9
195	15	166.8	5.6	R150	T100B2	9.9
195	15	164.8	3.8	R130	T100B2	6.8
195	15	162.9	2.4	R110	T100B2	4.6
195	15	160.9	1.3	R85	T100B2	2.7
195	15	160.9	0.7	R70	T100B2	1.9
147	20	219.0	4.9	R150	T112A2	9.3
147	20	216.4	3.2	R130	T112A2	6.4
147	20	213.8	2.2	R110	T112A2	4.4
147	20	211.2	1.1	R85	T112A2	2.4
146	20	219.8	4.9	R150	T100B2	9.3
146	20	217.2	3.2	R130	T100B2	6.4
146	20	214.6	2.2	R110	T100B2	4.4
146	20	211.9	1.1	R85	T100B2	2.4
144	10	230.8	5.1	R150	T112A4	11
144	10	230.8	3.4	R130	T112A4	8.4
144	10	225.5	2.4	R110	T112A4	5.6
144	10	222.8	1.3	R85	T112A4	3.2
144	10	220.2	0.6	R70	T112A4	2.2
143	10	232.4	5.1	R150	T100BL4	11
143	10	232.4	3.4	R130	T100BL4	8.4
143	10	227.1	2.4	R110	T100BL4	5.6
143	10	224.4	1.2	R85	T100BL4	3.2
143	10	221.7	0.6	R70	T100BL4	2.2
139	7	239.8	5.4	R150	T132M6	11
139	7	239.8	3.6	R130	T132M6	8.4
139	7	234.3	2.5	R110	T132M6	5.6
105	28	281.1	3.4	R150	T112A2	6.2
105	28	277.5	2.2	R130	T112A2	4.5
105	28	281.1	1.5	R110	T112A2	3.3
105	28	273.8	0.8	R85	T112A2	1.8
104	28	282.0	3.4	R150	T100B2	6.2
104	28	278.4	2.2	R130	T100B2	4.5
104	28	282.0	1.5	R110	T100B2	3.3
104	28	274.7	0.8	R85	T100B2	1.8
97	10	342.6	5.8	R180	T132M6	16
97	10	338.7	4.2	R150	T132M6	11
97	10	334.7	2.8	R130	T132M6	7.2
97	10	330.8	1.9	R110	T132M6	5.2
96	15	338.2	3.8	R150	T112A4	9.9
96	15	334.3	2.5	R130	T112A4	6.8
96	15	326.3	1.6	R110	T112A4	4.6
96	15	322.3	0.9	R85	T112A4	2.7
95	15	340.6	3.7	R150	T100BL4	9.9
95	15	336.6	2.5	R130	T100BL4	6.8
95	15	328.6	1.6	R110	T100BL4	4.6
95	15	324.5	0.9	R85	T100BL4	2.7
79	37	390.7	6.0	CB180	T112A2	11
79	37	392.1	6.0	CB180	T100B2	11
73	40	422.4	4.0	CB150	T112A2	7.8

1.7 - *Gearmotors*

n_2 min^{-1}	ir	T2 Nm	FS'		4.0 kW	Ptn kW
73	40	396.3	2.7	R150	T112A2	6.0
73	40	417.2	2.7	CB130	T112A2	5.6
73	40	385.9	1.8	R130	T112A2	4.0
73	40	385.9	1.3	R110	T112A2	3.0
73	40	375.5	0.6	R85	T112A2	1.6
73	40	423.9	4.0	CB150	T100B2	7.8
73	40	397.7	2.7	R150	T100B2	6.0
73	40	418.6	2.7	CB130	T100B2	5.6
73	40	387.3	1.8	R130	T100B2	4.0
73	40	387.2	1.3	R110	T100B2	3.0
73	40	376.8	0.6	R85	T100B2	1.6
72	20	445.7	3.2	R150	T112A4	9.3
72	20	440.4	2.1	R130	T112A4	6.4
72	20	429.7	1.4	R110	T112A4	4.4
72	20	419.2	0.7	R85	T112A4	2.4
72	20	448.8	3.2	R150	T100BL4	9.3
72	20	443.4	2.1	R130	T100BL4	6.4
72	20	432.8	1.4	R110	T100BL4	4.4
72	20	422.1	0.7	R85	T100BL4	2.4
68	43	448.5	1.4	CB110	T112A2	4.2
68	43	450.0	1.4	CB110	T100B2	4.2
65	15	502.1	4.3	R180	T132M6	14
65	15	490.3	3.1	R150	T132M6	8.8
65	15	490.2	2.0	R130	T132M6	6.4
65	15	472.5	1.3	R110	T132M6	4.2
60	49	472.7	2.2	R150	T112A2	5.5
60	49	459.9	1.5	R130	T112A2	3.6
60	49	459.9	1.0	R110	T112A2	2.7
60	49	474.4	2.2	R150	T100B2	5.5
60	49	461.5	1.5	R130	T100B2	3.6
60	49	461.6	1.0	R110	T100B2	2.7
59	50	521.5	3.5	CB150	T112A2	7.4
59	50	515.0	2.3	CB130	T112A2	5.3
58	50	523.3	3.5	CB150	T100B2	7.4
58	50	516.8	2.3	CB130	T100B2	5.3
57	51	532.0	1.2	CB110	T112A2	4.2
57	51	533.8	1.2	CB110	T100B2	4.2
56	52	549.1	4.8	CB180	T112A2	11
56	52	551.1	4.8	CB180	T100B2	11
52	56	540.3	1.9	R150	T112A2	5.5
52	56	525.7	1.2	R130	T112A2	3.5
52	56	518.3	0.7	R110	T112A2	2.7
52	56	542.1	1.9	R150	T100B2	5.5
52	56	527.5	1.2	R130	T100B2	3.5
52	56	520.2	0.7	R110	T100B2	2.7
51	28	564.5	2.3	R150	T112A4	6.2
51	28	564.5	1.4	R130	T112A4	4.5
51	28	557.0	1.0	R110	T112A4	3.3
51	28	568.4	2.3	R150	T100BL4	6.2
51	28	568.5	1.4	R130	T100BL4	4.5
51	28	561.0	1.0	R110	T100BL4	3.3
51	58	597.4	3.0	CB150	T112A2	7.1
51	58	597.3	2.0	CB130	T112A2	5.3
50	58	599.5	3.0	CB150	T100B2	7.1
50	58	599.5	2.0	CB130	T100B2	5.3
50	59	615.4	1.1	CB110	T112A2	4.2
49	59	617.5	1.1	CB110	T100B2	4.2
49	20	669.5	5.8	R215	T132M6	17
49	20	653.7	3.7	R180	T132M6	12
49	20	645.8	2.6	R150	T132M6	8.3
49	20	645.9	1.7	R130	T132M6	6.0
47	62	646.6	4.0	CB180	T112A2	10
47	62	648.8	4.0	CB180	T100B2	10
42	69	710.8	1.0	CB110	T112A2	4.2
42	69	713.1	1.0	CB110	T100B2	4.2
42	70	638.8	1.5	R150	T112A2	4.5
42	70	629.7	1.0	R130	T112A2	3.3
42	70	620.5	0.6	R110	T112A2	2.3
42	70	641.1	1.4	R150	T100B2	4.5
42	70	631.9	1.0	R130	T100B2	3.3
42	70	622.8	0.6	R110	T100B2	2.3
41	72	741.7	2.6	CB150	T112A2	7.1
41	72	732.2	1.7	CB130	T112A2	5.1
41	72	744.0	2.6	CB150	T100B2	7.1
41	72	734.6	1.7	CB130	T100B2	5.1
39	75	782.2	6.5	CB215	T112A2	13
39	75	772.4	3.6	CB180	T112A2	9.7
39	75	785.0	6.5	CB215	T100B2	13
39	75	775.2	3.6	CB180	T100B2	9.7
39	37	785.2	3.8	CB180	T112A4	10

1.7 - Getriebemotoren

n_2 min^{-1}	ir	T2 Nm	FS'		4.0 kW	Ptn kW
39	37	790.7	3.7	CB180	T100BL4	10
37	80	824.1	5.8	CB215	T112A2	12
37	80	719.8	1.2	R150	T112A2	4.4
37	80	751.0	0.9	CB110	T112A2	3.2
37	80	709.3	0.9	R130	T112A2	3.0
37	80	826.8	5.8	CB215	T100B2	12
37	80	722.1	1.2	R150	T100B2	4.4
37	80	753.5	0.9	CB110	T100B2	3.2
37	80	711.7	0.9	R130	T100B2	3.0
36	40	838.2	2.5	CB150	T112A4	7.1
36	40	795.8	1.8	R150	T112A4	6.0
36	40	827.6	1.7	CB130	T112A4	5.1
36	40	774.6	1.2	R130	T112A4	4.0
36	40	764.1	0.8	R110	T112A4	3.0
36	40	844.2	2.5	CB150	T100BL4	7.1
36	40	801.4	1.7	R150	T100BL4	6.0
36	40	833.4	1.6	CB130	T100BL4	5.1
36	40	780.0	1.2	R130	T100BL4	4.0
36	40	769.4	0.8	R110	T100BL4	3.0
35	28	926.3	3.5	R215	T132M6	16
35	28	849.1	2.6	R180	T132M6	9.0
35	28	816.1	1.8	R150	T132M6	5.7
35	28	827.1	1.1	R130	T132M6	4.3
34	85	842.3	3.2	CB180	T112A2	8.5
34	85	842.2	2.2	CB150	T112A2	6.2
34	85	820.1	1.5	CB130	T112A2	4.3
34	85	845.2	3.2	CB180	T100B2	8.5
34	85	845.2	2.2	CB150	T100B2	6.2
34	85	822.9	1.5	CB130	T100B2	4.3
34	42	880.1	6.0	CB215	T112A4	12
34	42	886.3	6.0	CB215	T100BL4	12
33	43	889.8	0.9	CB110	T112A4	3.8
33	43	895.7	0.9	CB110	T100BL4	3.8
32	30	980.7	5.8	R250	T132M6	23
29	49	922.8	1.4	R150	T112A4	5.5
29	49	909.8	1.0	R130	T112A4	3.6
29	49	897.0	0.6	R110	T112A4	2.7
29	100	860.4	1.0	R150	T112A2	3.9
29	100	834.5	0.7	R130	T112A2	2.7
29	100	863.3	0.9	R150	T100B2	3.9
29	100	837.4	0.7	R130	T100B2	2.7
29	49	929.4	1.4	R150	T100BL4	5.5
29	49	916.4	1.0	R130	T100BL4	3.6
29	49	903.2	0.6	R110	T100BL4	2.7
29	50	1035	2.1	CB150	T112A4	6.7
29	50	1035	1.4	CB130	T112A4	5.1
29	50	1042	2.1	CB150	T100BL4	6.7
29	50	1042	1.4	CB130	T100BL4	5.1
28	51	1055	0.7	CB110	T112A4	3.8
28	51	1063	0.7	CB110	T100BL4	3.8
28	52	1090	3.0	CB180	T112A4	9.7
28	52	1097	3.0	CB180	T100BL4	9.7
27	107	1046	2.8	CB180	T112A2	8.2
27	107	1050	2.8	CB180	T100B2	8.2
27	53	1111	5.1	CB215	T112A4	12
27	53	1119	5.0	CB215	T100BL4	12
27	110	1033	0.7	CB110	T112A2	3.2
27	110	1036	0.7	CB110	T100B2	3.2
26	37	1136	2.9	CB180	T132M6	9.3
26	112	1139	4.7	CB215	T112A2	11
26	112	1143	4.6	CB215	T100B2	11
26	56	1085	1.2	R150	T112A4	5.5
26	56	1025	0.8	R130	T112A4	3.5
26	56	1092	1.2	R150	T100BL4	5.5
26	56	1032	0.8	R130	T100BL4	3.5
25	115	1125	1.8	CB150	T112A2	5.9
25	115	1094	1.2	CB130	T112A2	4.2
25	115	1129	1.8	CB150	T100B2	5.9
25	115	1098	1.2	CB130	T100B2	4.2
25	58	1185	1.9	CB150	T112A4	6.4
25	58	1185	1.2	CB130	T112A4	4.9
25	58	1193	1.9	CB150	T100BL4	6.4
25	58	1193	1.2	CB130	T100BL4	4.9
24	120	1189	6.0	CB250	T112A2	16
24	59	1189	0.7	CB110	T112A4	3.8
24	120	1193	6.0	CB250	T100B2	16
24	40	1213	4.8	R250	T132M6	17
24	40	1213	3.0	R215	T132M6	11
24	40	1150	2.0	R180	T132M6	7.7
24	40	1229	1.9	CB150	T132M6	6.7

1.7 - Motoriduttori

n_2 min^{-1}	ir	T2 Nm	FS'		4.0 kW	Ptn kW
24	40	1150	1.4	R150	T132M6	5.5
24	40	1213	1.3	CB130	T132M6	4.7
24	40	1119	0.9	R130	T132M6	3.7
24	59	1198	0.7	CB110	T100BL4	3.8
24	121	1199	4.1	CB215	T112A2	10
24	121	1203	4.1	CB215	T100B2	10
24	124	1213	2.5	CB180	T112A2	8.2
24	124	1217	2.5	CB180	T100B2	8.2
23	62	1299	6.4	CB250	T112A4	18
23	62	1283	4.6	CB215	T112A4	11
23	62	1283	2.5	CB180	T112A4	9.3
23	42	1290	4.6	CB215	T132M6	11
23	62	1309	6.3	CB250	T100BL4	18
23	62	1292	4.5	CB215	T100BL4	11
23	62	1292	2.5	CB180	T100BL4	9.3
23	129	1194	0.6	CB110	T112A2	3.2
23	129	1198	0.6	CB110	T100B2	3.2
21	69	1391	0.6	CB110	T112A4	3.8
21	69	1401	0.6	CB110	T100BL4	3.8
21	70	1244	1.0	R150	T112A4	4.5
21	70	1244	0.7	R130	T112A4	3.3
20	70	1253	0.9	R150	T100BL4	4.5
20	70	1253	0.6	R130	T100BL4	3.3
20	144	1389	1.6	CB150	T112A2	5.7
20	144	1352	1.0	CB130	T112A2	4.0
20	144	1394	1.6	CB150	T100B2	5.7
20	144	1356	1.0	CB130	T100B2	4.0
20	145	1437	5.3	CB250	T112A2	16
20	145	1442	5.3	CB250	T100B2	16
20	146	1447	3.6	CB215	T112A2	10
20	146	1452	3.6	CB215	T100B2	10
20	72	1471	1.6	CB150	T112A4	6.4
20	72	1452	1.1	CB130	T112A4	4.7
19.9	72	1481	1.6	CB150	T100BL4	6.4
19.9	72	1462	1.1	CB130	T100BL4	4.7
19.8	49	1447	4.0	R250	T132M6	16
19.8	49	1389	1.7	R180	T132M6	7.4
19.8	49	1331	1.1	R150	T132M6	4.8
19.5	150	1447	2.2	CB180	T112A2	7.9
19.5	150	1452	2.2	CB180	T100B2	7.9
19.4	50	1457	2.5	R215	T132M6	9.9
19.4	50	1516	1.6	CB150	T132M6	6.4
19.4	50	1516	1.1	CB130	T132M6	4.5
19.2	75	1552	4.0	CB215	T112A4	11
19.2	75	1532	2.2	CB180	T112A4	8.9
19.1	75	1563	3.9	CB215	T100BL4	11
19.1	75	1543	2.2	CB180	T100BL4	8.9
18.7	52	1598	5.6	CB250	T132M6	17
18.7	52	1598	2.3	CB180	T132M6	9.3
18.5	78	1614	5.5	CB250	T112A4	17
18.3	78	1626	5.4	CB250	T100BL4	17
18.3	53	1607	3.9	CB215	T132M6	11
18.1	162	1415	1.3	CB150	T112A2	4.5
18.1	162	1372	0.8	CB130	T112A2	3.2
18.0	162	1420	1.3	CB150	T100B2	4.5
18.0	162	1378	0.8	CB130	T100B2	3.2
18.0	80	1613	3.6	CB215	T112A4	10
18.0	80	1401	0.8	R150	T112A4	4.4
17.9	80	1624	3.6	CB215	T100BL4	10
17.9	80	1410	0.8	R150	T100BL4	4.4
17.3	56	1566	1.5	R180	T132M6	7.2
17.3	56	1500	1.0	R150	T132M6	4.7
17.0	57	1594	2.2	R215	T132M6	8.8
16.9	85	1669	2.0	CB180	T112A4	7.9
16.9	85	1646	1.4	CB150	T112A4	5.5
16.9	85	1624	0.9	CB130	T112A4	4.0
16.8	174	1429	3.3	CB215	T112A2	6.8
16.8	174	1542	1.8	CB180	T112A2	6.4
16.8	85	1681	2.0	CB180	T100BL4	7.9
16.8	85	1658	1.4	CB150	T100BL4	5.5
16.8	85	1635	0.9	CB130	T100BL4	4.0
16.8	174	1434	3.2	CB215	T100B2	6.8
16.8	174	1548	1.8	CB180	T100B2	6.4
16.7	58	1737	1.4	CB150	T132M6	6.2
16.7	58	1737	0.9	CB130	T132M6	4.3
16.6	177	1708	4.1	CB250	T112A2	15
16.5	177	1713	4.1	CB250	T100B2	15
16.2	60	1748	3.1	R250	T132M6	15
16.0	90	1862	4.9	CB250	T112A4	17
15.9	90	1875	4.9	CB250	T100BL4	17

1.7 - *Gearmotors*

n_2 min^{-1}	ir	T2 Nm	FS'		4.0 kW	Ptn kW
15.7	62	1904	4.9	CB250	T132M6	17
15.7	62	1880	3.5	CB215	T132M6	11
15.7	62	1880	1.9	CB180	T132M6	8.9
14.5	202	1739	1.1	CB150	T112A2	4.4
14.5	202	1686	0.7	CB130	T112A2	3.1
14.5	202	1744	1.1	CB150	T100B2	4.4
14.5	202	1691	0.7	CB130	T100B2	3.1
14.4	100	1644	0.6	R150	T112A4	3.9
14.3	100	1656	0.6	R150	T100BL4	3.9
14.2	207	1836	3.7	CB250	T112A2	12
14.1	207	1841	3.7	CB250	T100B2	12
14.1	69	1929	1.9	R215	T132M6	8.8
13.9	70	1874	2.7	R250	T132M6	12
13.9	70	1819	1.2	R180	T132M6	6.1
13.9	70	1737	0.8	R150	T132M6	4.0
13.8	213	1888	2.3	CB215	T112A2	7.8
13.8	213	1804	1.5	CB180	T112A2	5.8
13.7	213	1895	2.3	CB215	T100B2	7.8
13.7	213	1811	1.5	CB180	T100B2	5.8
13.5	72	2127	1.2	CB150	T132M6	5.9
13.5	72	2127	0.8	CB130	T132M6	4.2
13.5	107	2072	1.7	CB180	T112A4	7.6
13.4	107	2087	1.7	CB180	T100BL4	7.6
13.2	109	2256	4.3	CB250	T112A4	17
13.1	109	2271	4.2	CB250	T100BL4	17
12.9	75	2245	3.0	CB215	T132M6	10
12.9	75	2245	1.7	CB180	T132M6	8.5
12.9	112	2228	2.8	CB215	T112A4	10
12.8	112	2244	2.8	CB215	T100BL4	10
12.7	231	1928	1.0	CB150	T112A2	4.1
12.7	231	1868	0.7	CB130	T112A2	3.0
12.6	231	1934	1.0	CB150	T100B2	4.1
12.6	231	1874	0.7	CB130	T100B2	3.0
12.5	115	2197	1.1	CB150	T112A4	5.3
12.5	115	2166	0.7	CB130	T112A4	3.9
12.4	78	2364	4.2	CB250	T132M6	16
12.4	115	2213	1.1	CB150	T100BL4	5.3
12.4	115	2182	0.7	CB130	T100BL4	3.9
12.3	79	2084	2.2	R250	T132M6	12
12.2	240	2096	3.4	CB250	T112A2	11
12.2	240	2103	3.4	CB250	T100B2	11
12.1	80	2364	2.7	CB215	T132M6	10
12.1	80	2017	1.6	R215	T132M6	7.1
12.1	80	2049	1.0	R180	T132M6	5.9
12.1	80	1954	0.7	R150	T132M6	3.9
12.0	120	2356	3.7	CB250	T112A4	15
11.9	120	2371	3.7	CB250	T100BL4	15
11.9	121	2375	2.5	CB215	T112A4	9.6
11.8	121	2392	2.5	CB215	T100BL4	9.6
11.8	248	2167	2.1	CB215	T112A2	7.6
11.8	248	2070	1.4	CB180	T112A2	5.7
11.8	248	2175	2.1	CB215	T100B2	7.6
11.8	248	2077	1.4	CB180	T100B2	5.7
11.6	124	2369	1.5	CB180	T112A4	7.3
11.5	124	2386	1.5	CB180	T100BL4	7.3
11.4	85	2411	1.5	CB180	T132M6	7.3
11.4	85	2410	1.1	CB150	T132M6	5.3
11.4	85	2344	0.7	CB130	T132M6	3.5
11.2	261	2143	1.3	CB180	T112A2	5.5
11.2	261	2151	1.3	CB180	T100B2	5.5
11.0	267	2264	1.9	CB215	T112A2	7.2
10.9	267	2270	1.9	CB215	T100B2	7.2
10.8	90	2729	3.7	CB250	T132M6	16
10.6	136	2417	2.5	110/215	T112A4	6.0
10.5	136	2435	2.5	110/215	T100BL4	6.0
10.3	140	2413	3.7	130/250	T112A4	9.1
10.3	140	2413	1.6	110/180	T112A4	6.0
10.3	140	2413	1.6	85/180	T112A4	3.4
10.3	140	2487	1.5	130/180	T112A4	9.1
10.3	140	2376	1.1	85/150	T112A4	3.4
10.3	140	2413	1.1	110/150	T112A4	6.0
10.3	140	2302	0.7	85/130	T112A4	3.4
10.3	140	2302	0.7	70/130	T112A4	2.5
10.2	140	2432	3.7	130/250	T100BL4	9.1
10.2	140	2432	1.5	110/180	T100BL4	6.0
10.2	140	2432	1.5	85/180	T100BL4	3.4
10.2	140	2507	1.5	130/180	T100BL4	9.1
10.2	140	2394	1.1	85/150	T100BL4	3.4
10.2	140	2432	1.1	110/150	T100BL4	6.0
10.2	140	2320	0.7	70/130	T100BL4	2.5

1.7 - Getriebemotoren

n_2 min^{-1}	ir	T2 Nm	FS'		4.0 kW	Ptn kW
10.2	140	2320	0.7	85/130	T100BL4	3.4
10.2	288	2329	0.9	CB150	T112A2	3.9
10.1	288	2336	0.9	CB150	T100B2	3.9
10.1	290	2459	2.9	CB250	T112A2	11
10.1	290	2466	2.9	CB250	T100B2	11
10.0	144	2712	1.0	CB150	T112A4	5.1
10.0	144	2674	0.6	CB130	T112A4	3.7
9.9	145	2847	3.2	CB250	T112A4	15
9.9	144	2731	0.9	CB150	T100BL4	5.1
9.9	144	2693	0.6	CB130	T100BL4	3.7
9.9	98	2585	1.7	R250	T132M6	12
9.9	145	2867	3.2	CB250	T100BL4	15
9.9	146	2828	2.2	CB215	T112A4	9.3
9.8	146	2849	2.2	CB215	T100BL4	9.3
9.8	300	2581	1.8	CB215	T112A2	7.4
9.7	300	2591	1.8	CB215	T100B2	7.4
9.7	100	2520	1.2	R215	T132M6	7.1
9.7	100	2403	0.8	R180	T132M6	5.3
9.6	304	2457	1.2	CB180	T112A2	5.4
9.6	304	2464	1.2	CB180	T100B2	5.4
9.6	150	2865	1.3	CB180	T112A4	7.3
9.5	150	2886	1.3	CB180	T100BL4	7.3
9.1	107	2990	1.3	CB180	T132M6	7.0
9.1	323	2569	0.7	CB150	T112A2	3.8
9.0	323	2577	0.7	CB150	T100B2	3.8
8.9	109	3305	3.2	CB250	T132M6	16
8.9	162	2707	0.8	CB150	T112A4	4.0
8.8	162	2726	0.8	CB150	T100BL4	4.0
8.7	112	3264	2.2	CB215	T132M6	9.6
8.4	115	3172	0.9	CB150	T132M6	4.9
8.3	174	2906	1.9	CB215	T112A4	6.8
8.3	174	2999	1.1	CB180	T112A4	5.8
8.2	174	2928	1.9	CB215	T100BL4	6.8
8.2	174	3021	1.1	CB180	T100BL4	5.8
8.1	360	3004	2.5	CB250	T112A2	11
8.1	177	3379	2.5	CB250	T112A4	14
8.1	360	3015	2.5	CB250	T100B2	11
8.1	120	3451	2.8	CB250	T132M6	14
8.1	177	3404	2.5	CB250	T100BL4	14
8.0	121	3429	1.9	CB215	T132M6	8.9
8.0	368	2927	1.1	CB180	T112A2	5.2
7.9	368	2938	1.1	CB180	T100B2	5.2
7.8	124	3469	1.2	CB180	T132M6	7.0
7.8	375	3082	1.5	CB215	T112A2	6.8
7.8	375	3090	1.5	CB215	T100B2	6.8
7.4	195	3365	2.0	110/215	T112A4	5.6
7.3	195	3387	2.0	110/215	T100BL4	5.6
7.3	403	3153	0.6	CB150	T112A2	3.7
7.3	403	3161	0.6	CB150	T100B2	3.7
7.2	200	3183	3.1	130/250	T112A4	8.4
7.2	200	3289	1.2	85/180	T112A4	3.2
7.2	200	3342	1.2	110/180	T112A4	5.6
7.2	200	3396	1.2	130/180	T112A4	8.4
7.2	200	3237	0.9	85/150	T112A4	3.2
7.2	200	3289	0.9	110/150	T112A4	5.6
7.2	200	3206	3.0	130/250	T100BL4	8.4
7.2	200	3312	1.2	85/180	T100BL4	3.2
7.2	200	3366	1.2	110/180	T100BL4	5.6
7.2	200	3420	1.2	130/180	T100BL4	8.4
7.2	200	3259	0.9	85/150	T100BL4	3.2
7.2	200	3312	0.9	110/150	T100BL4	5.6
7.1	202	3322	0.7	CB150	T112A4	3.9
7.1	202	3346	0.7	CB150	T100BL4	3.9
7.0	420	3338	0.9	CB180	T112A2	5.2
7.0	207	3568	2.3	CB250	T112A4	11
7.0	420	3353	0.9	CB180	T100B2	5.2
6.9	207	3593	2.3	CB250	T100BL4	11
6.9	428	3402	1.3	CB215	T112A2	6.4
6.8	428	3417	1.3	CB215	T100B2	6.4
6.8	213	3616	1.4	CB215	T112A4	7.0
6.8	213	3447	1.0	CB180	T112A4	5.2
6.8	434	3226	0.8	CB180	T112A2	4.7
6.7	435	3571	1.9	CB250	T112A2	10
6.7	144	3968	0.7	CB150	T132M6	4.9
6.7	434	3236	0.8	CB180	T100B2	4.7
6.7	435	3586	1.9	CB250	T100B2	10
6.7	213	3643	1.4	CB215	T100BL4	7.0
6.7	213	3472	1.0	CB180	T100BL4	5.2
6.7	145	4111	2.4	CB250	T132M6	14
6.6	146	4085	1.7	CB215	T132M6	8.6

1.7 - Motoriduttori

n_2 min^{-1}	ir	T2 Nm	FS'		4.0 kW	Ptn kW
6.5	150	4133	1.0	CB180	T132M6	6.8
6.2	231	3679	0.6	CB150	T112A4	3.7
6.2	231	3703	0.6	CB150	T100BL4	3.7
6.0	240	4075	2.1	CB250	T112A4	11
6.0	162	3890	0.6	CB150	T132M6	3.8
6.0	240	4102	2.1	CB250	T100BL4	11
5.8	248	4143	1.3	CB215	T112A4	6.8
5.8	248	3945	0.9	CB180	T112A4	5.1
5.8	508	3774	1.4	CB250	T112A2	8.8
5.8	248	4171	1.3	CB215	T100BL4	6.8
5.8	248	3972	0.9	CB180	T100BL4	5.1
5.8	508	3787	1.4	CB250	T100B2	8.8
5.7	518	4049	1.1	CB215	T112A2	6.3
5.6	518	4064	1.1	CB215	T100B2	6.3
5.6	525	3834	0.7	CB180	T112A2	4.6
5.6	174	4321	1.4	CB215	T132M6	6.8
5.6	174	4321	0.8	CB180	T132M6	5.5
5.6	525	3847	0.7	CB180	T100B2	4.6
5.5	261	4083	0.8	CB180	T112A4	5.0
5.5	177	4880	1.9	CB250	T132M6	13
5.5	261	4113	0.8	CB180	T100BL4	5.0
5.4	267	4323	1.2	CB215	T112A4	6.4
5.4	267	4347	1.2	CB215	T100BL4	6.4
5.1	280	4087	0.9	85/180	T112A4	3.2
5.1	280	4087	0.9	110/180	T112A4	5.6
5.1	280	4236	0.9	130/180	T112A4	8.4
5.1	280	3939	0.6	85/150	T112A4	3.2
5.1	280	4013	0.6	110/150	T112A4	5.6
5.1	573	4111	1.4	CB250	T112A2	8.4
5.1	280	4111	0.9	85/180	T100BL4	3.2
5.1	280	4111	0.9	110/180	T100BL4	5.6
5.1	280	4261	0.9	130/180	T100BL4	8.4
5.1	280	3962	0.6	85/150	T100BL4	3.2
5.1	280	4037	0.6	110/150	T100BL4	5.6
5.1	573	4120	1.4	CB250	T100B2	8.4
5.0	290	4766	1.8	CB250	T112A4	11
4.9	290	4804	1.8	CB250	T100BL4	11
4.9	293	4746	1.5	110/215	T112A4	5.6
4.9	293	4775	1.5	110/215	T100BL4	5.6
4.9	600	4148	1.0	CB215	T112A2	5.3
4.9	600	4227	0.6	CB180	T112A2	4.4
4.9	600	4157	1.0	CB215	T100B2	5.3
4.9	600	4235	0.6	CB180	T100B2	4.4
4.8	300	4854	2.2	130/250	T112A4	8.4
4.8	300	4934	1.1	CB215	T112A4	6.6
4.8	300	4885	2.2	130/250	T100BL4	8.4
4.8	300	4965	1.1	CB215	T100BL4	6.6
4.7	304	4674	0.8	CB180	T112A4	4.9
4.7	304	4715	0.7	CB180	T100BL4	4.9
4.7	207	5131	1.8	CB250	T132M6	10
4.6	213	5205	1.1	CB215	T132M6	6.6
4.6	213	4953	0.7	CB180	T132M6	5.0
4.1	710	5087	1.1	CB250	T112A2	8.4
4.1	710	5112	1.1	CB250	T100B2	8.4
4.0	240	5957	1.6	CB250	T132M6	10
4.0	360	5826	1.5	CB250	T112A4	9.7
4.0	360	5870	1.5	CB250	T100BL4	9.7
3.9	248	5960	1.0	CB215	T132M6	6.4
3.9	750	5178	0.8	CB215	T112A2	5.3
3.9	248	5667	0.7	CB180	T132M6	4.9
3.9	368	5569	0.7	CB180	T112A4	4.7
3.9	750	5205	0.8	CB215	T100B2	5.3
3.9	368	5597	0.7	CB180	T100BL4	4.7
3.8	375	5869	0.9	CB215	T112A4	6.1
3.8	375	5916	0.9	CB215	T100BL4	6.1
3.7	261	5854	0.6	CB180	T132M6	4.7
3.7	390	6211	1.2	110/215	T112A4	4.4
3.7	390	6245	1.2	110/215	T100BL4	4.4
3.6	267	6104	0.9	CB215	T132M6	6.0
3.6	400	5624	1.9	130/250	T112A4	6.4
3.6	400	6154	0.7	110/180	T112A4	4.4
3.6	400	5942	0.7	85/180	T112A4	2.4
3.6	400	6261	0.7	130/180	T112A4	6.4
3.6	400	5655	1.9	130/250	T100BL4	6.4
3.6	400	6189	0.7	110/180	T100BL4	4.4
3.6	400	5976	0.7	85/180	T100BL4	2.4
3.6	400	6295	0.7	130/180	T100BL4	6.4
3.4	428	6480	0.8	CB215	T112A4	5.8
3.3	290	6862	1.4	CB250	T132M6	10
3.3	428	6520	0.8	CB215	T100BL4	5.8

1.7 - *Gearmotors*

n_2 min^{-1}	ir	T2 Nm	FS'		4.0 kW	Ptn kW
3.3	435	6809	1.2	CB250	T112A4	9.2
3.3	435	6851	1.2	CB250	T100BL4	9.2
3.2	300	7095	0.9	CB215	T132M6	6.3
2.8	508	7153	0.9	CB250	T112A4	8.1
2.8	508	7205	0.9	CB250	T100BL4	8.1
2.8	518	7696	0.7	CB215	T112A4	5.7
2.8	518	7750	0.7	CB215	T100BL4	5.7
2.7	360	8379	1.2	CB250	T132M6	9.2
2.6	375	8408	0.7	CB215	T132M6	5.8
2.5	573	7762	0.9	CB250	T112A4	7.7
2.5	573	7794	0.9	CB250	T100BL4	7.7
2.4	600	7322	1.4	130/250	T112A4	6.8
2.4	600	8118	0.8	110/215	T112A4	4.6
2.4	600	7799	0.6	CB215	T112A4	4.9
2.4	600	7383	1.4	130/250	T100BL4	6.8
2.4	600	8186	0.8	110/215	T100BL4	4.6
2.4	600	7866	0.6	CB215	T100BL4	4.9
2.3	428	9086	0.6	CB215	T132M6	5.4
2.2	435	9764	0.9	CB250	T132M6	8.8
2.0	710	9597	0.7	CB250	T112A4	7.7
2.0	710	9692	0.7	CB250	T100BL4	7.7
1.9	508	10201	0.7	CB250	T132M6	7.7
1.7	573	11076	0.7	CB250	T132M6	7.4
1.5	980	12474	0.8	130/250	T112A4	3.6
1.5	980	12560	0.8	130/250	T100BL4	3.6
1.0	1446	15660	0.7	130/250	T112A4	3.6
0.99	1446	15819	0.7	130/250	T100BL4	3.6

1.7 - Getriebemotoren

n_2 min^{-1}	ir	T2 Nm	FS'		5.5 kW	Ptn kW
419	7	110.4	4.5	R130	T132S2	9.1
419	7	107.9	3.2	R110	T132S2	6.0
417	7	110.8	4.5	R130	T112B2	9.1
417	7	108.3	3.1	R110	T112B2	6.0
417	7	108.3	1.6	R85	T112B2	3.4
417	7	108.3	0.9	R70	T112B2	2.5
293	10	156.0	5.5	R150	T132S2	11
293	10	156.0	3.7	R130	T132S2	8.4
293	10	152.4	2.6	R110	T132S2	5.6
292	10	156.5	5.4	R150	T112B2	11
292	10	156.5	3.7	R130	T112B2	8.4
292	10	152.9	2.6	R110	T112B2	5.6
292	10	152.9	1.3	R85	T112B2	3.2
292	10	151.1	0.7	R70	T112B2	2.2
209	7	221.6	4.8	R150	T132S4	12
209	7	221.6	3.2	R130	T132S4	9.1
209	7	216.6	2.2	R110	T132S4	6.0
206	7	224.7	4.8	R150	T112BL4	12
206	7	224.7	3.1	R130	T112BL4	9.1
206	7	219.6	2.2	R110	T112BL4	6.0
206	7	217.0	1.1	R85	T112BL4	3.4
206	7	217.0	0.6	R70	T112BL4	2.5
195	15	231.3	5.7	R180	T132S2	15
195	15	228.6	4.1	R150	T132S2	9.9
195	15	225.9	2.8	R130	T132S2	6.8
195	15	223.2	1.8	R110	T132S2	4.6
195	15	229.3	4.1	R150	T112B2	9.9
195	15	226.6	2.7	R130	T112B2	6.8
195	15	223.9	1.8	R110	T112B2	4.6
195	15	221.3	1.0	R85	T112B2	2.7
147	20	301.2	5.0	R180	T132S2	13
147	20	301.2	3.6	R150	T132S2	9.3
147	20	297.6	2.3	R130	T132S2	6.4
146	10	316.6	5.2	R180	T132S4	17
146	10	313.0	3.8	R150	T132S4	11
146	20	302.2	3.5	R150	T112B2	9.3
146	10	313.0	2.5	R130	T132S4	8.4
146	20	298.6	2.3	R130	T112B2	6.4
146	10	305.8	1.8	R110	T132S4	5.6
146	20	295.0	1.6	R110	T112B2	4.4
146	20	291.4	0.8	R85	T112B2	2.4
144	10	317.3	3.7	R150	T112BL4	11
144	10	317.3	2.5	R130	T112BL4	8.4
144	10	310.0	1.7	R110	T112BL4	5.6
144	10	306.4	0.9	R85	T112BL4	3.2
139	7	333.6	5.5	R180	T132ML6	17
139	7	329.8	3.9	R150	T132ML6	11
139	7	329.8	2.6	R130	T132ML6	8.4
139	7	322.2	1.8	R110	T132ML6	5.6
105	28	431.7	5.6	R215	T132S2	18
105	28	401.6	3.5	R180	T132S2	9.9
105	28	386.5	2.5	R150	T132S2	6.2
105	28	381.5	1.6	R130	T132S2	4.5
104	28	387.8	2.5	R150	T112B2	6.2
104	28	382.8	1.6	R130	T112B2	4.5
104	28	387.8	1.1	R110	T112B2	3.3
97	15	464.1	3.9	R180	T132S4	15
97	15	458.7	2.8	R150	T132S4	9.9
97	15	453.3	1.9	R130	T132S4	6.8
97	15	442.5	1.2	R110	T132S4	4.6
97	10	471.1	4.2	R180	T132ML6	16
97	10	465.7	3.0	R150	T132ML6	11
97	10	460.3	2.1	R130	T132ML6	7.2
97	10	454.8	1.4	R110	T132ML6	5.2
96	15	465.1	2.7	R150	T112BL4	9.9
96	15	459.6	1.8	R130	T112BL4	6.8
96	15	448.6	1.2	R110	T112BL4	4.6
96	15	443.2	0.6	R85	T112BL4	2.7
79	37	537.3	4.4	CB180	T132S2	11
79	37	539.1	4.4	CB180	T112B2	11
73	40	580.8	4.1	R215	T132S2	13
73	40	580.8	2.9	CB150	T132S2	7.8
73	40	537.8	2.8	R180	T132S2	8.3
73	40	545.0	2.0	R150	T132S2	6.0
73	40	573.7	1.9	CB130	T132S2	5.6
73	40	530.6	1.3	R130	T132S2	4.0
73	20	618.8	5.3	R215	T132S4	18
73	20	604.4	3.4	R180	T132S4	13
73	40	582.8	2.9	CB150	T112B2	7.8
73	20	604.4	2.4	R150	T132S4	9.3

1.7 - Motoriduttori

n_2 min^{-1}	ir	T2 Nm	FS'		5.5 kW	Ptn kW
73	40	546.8	2.0	R150	T112B2	6.0
73	40	575.6	1.9	CB130	T112B2	5.6
73	20	597.2	1.5	R130	T132S4	6.4
73	40	532.5	1.3	R130	T112B2	4.0
73	40	532.4	0.9	R110	T112B2	3.0
72	20	612.8	2.3	R150	T112BL4	9.3
72	20	605.5	1.5	R130	T112BL4	6.4
72	20	590.9	1.0	R110	T112BL4	4.4
68	43	618.7	1.0	CB110	T112B2	4.2
65	15	706.6	5.5	R215	T132ML6	20
65	15	690.4	3.1	R180	T132ML6	14
65	15	674.1	2.2	R150	T132ML6	8.8
65	15	674.1	1.5	R130	T132ML6	6.4
65	15	649.7	1.0	R110	T132ML6	4.2
60	49	685.1	5.5	R250	T132S2	18
60	49	650.0	2.5	R180	T132S2	8.0
60	49	650.0	1.6	R150	T132S2	5.5
60	49	652.2	1.6	R150	T112B2	5.5
60	49	634.6	1.1	R130	T112B2	3.6
60	49	634.7	0.7	R110	T112B2	2.7
59	50	699.2	3.4	R215	T132S2	12
59	50	717.1	2.5	CB150	T132S2	7.4
59	50	708.1	1.7	CB130	T132S2	5.3
58	50	719.5	2.5	CB150	T112B2	7.4
58	50	710.6	1.7	CB130	T112B2	5.3
57	51	734.0	0.9	CB110	T112B2	4.2
56	52	755.0	3.5	CB180	T132S2	11
56	52	757.7	3.5	CB180	T112B2	11
55	53	769.6	5.9	CB215	T132S2	13
55	53	772.3	5.9	CB215	T112B2	13
52	56	742.9	2.2	R180	T132S2	7.7
52	56	742.9	1.4	R150	T132S2	5.5
52	28	856.3	3.7	R215	T132S4	17
52	28	795.8	2.4	R180	T132S4	9.9
52	28	765.6	1.7	R150	T132S4	6.2
52	56	745.4	1.4	R150	T112B2	5.5
52	28	765.6	1.1	R130	T132S4	4.5
52	56	725.3	0.9	R130	T112B2	3.5
51	28	776.2	1.6	R150	T112BL4	6.2
51	28	776.2	1.0	R130	T112BL4	4.5
51	28	765.9	0.7	R110	T112BL4	3.3
51	57	776.6	2.9	R215	T132S2	11
51	58	821.4	2.2	CB150	T132S2	7.1
51	58	821.3	1.5	CB130	T132S2	5.3
50	58	824.3	2.2	CB150	T112B2	7.1
50	58	824.3	1.5	CB130	T112B2	5.3
49	59	849.1	0.8	CB110	T112B2	4.2
49	60	828.3	4.3	R250	T132S2	17
49	30	906.5	5.3	R250	T132S4	25
49	20	920.5	6.2	R250	T132ML6	26
49	20	920.5	4.2	R215	T132ML6	17
49	20	898.9	2.7	R180	T132ML6	12
49	20	888.0	1.9	R150	T132ML6	8.3
49	20	888.1	1.2	R130	T132ML6	6.0
47	62	889.1	5.4	CB215	T132S2	13
47	62	889.1	2.9	CB180	T132S2	10
47	62	892.1	5.4	CB215	T112B2	13
47	62	892.1	2.9	CB180	T112B2	10
42	69	940.2	2.6	R215	T132S2	11
42	69	980.5	0.7	CB110	T112B2	4.2
42	70	903.4	3.8	R250	T132S2	14
42	70	903.5	1.6	R180	T132S2	6.5
42	70	878.3	1.1	R150	T132S2	4.5
42	70	881.5	1.1	R150	T112B2	4.5
42	70	868.9	0.7	R130	T112B2	3.3
41	72	1020	1.9	CB150	T132S2	7.1
41	72	1007	1.3	CB130	T132S2	5.1
41	72	1023	1.9	CB150	T112B2	7.1
41	72	1010	1.3	CB130	T112B2	5.1
39	37	1065	2.8	CB180	T132S4	10
39	75	1076	4.7	CB215	T132S2	13
39	75	1062	2.6	CB180	T132S2	9.7
39	75	1079	4.7	CB215	T112B2	13
39	75	1066	2.6	CB180	T112B2	9.7
39	37	1080	2.7	CB180	T112BL4	10
38	38	1094	6.4	CB250	T132S4	19
38	38	1109	6.4	CB250	T112BL4	19
38	78	1119	6.5	CB250	T132S2	19
37	78	1122	6.4	CB250	T112B2	19
37	79	991	3.0	R250	T132S2	13

1.7 - *Gearmotors*

n_2 min^{-1}	ir	T2 Nm	FS'		5.5 kW	Ptn kW
37	80	1133	4.2	CB215	T132S2	12
37	80	1004	2.2	R215	T132S2	8.5
37	80	990	1.4	R180	T132S2	6.3
37	80	990	0.9	R150	T132S2	4.4
37	40	1137	4.4	R250	T132S4	19
37	80	1137	4.2	CB215	T112B2	12
37	40	1137	2.7	R215	T132S4	12
37	40	1079	1.9	R180	T132S4	8.3
37	40	1137	1.8	CB150	T132S4	7.1
37	40	1079	1.3	R150	T132S4	6.0
37	40	1122	1.2	CB130	T132S4	5.1
37	80	993	0.9	R150	T112B2	4.4
37	40	1050	0.9	R130	T132S4	4.0
37	80	1036	0.6	CB110	T112B2	3.2
37	80	979	0.6	R130	T112B2	3.0
36	40	1153	1.8	CB150	T112BL4	7.1
36	40	1094	1.3	R150	T112BL4	6.0
36	40	1138	1.2	CB130	T112BL4	5.1
36	40	1065	0.8	R130	T112BL4	4.0
36	40	1051	0.6	R110	T112BL4	3.0
35	42	1194	4.4	CB215	T132S4	12
35	28	1274	2.5	R215	T132ML6	16
35	28	1168	1.9	R180	T132ML6	9.0
35	28	1122	1.3	R150	T132ML6	5.7
35	28	1137	0.8	R130	T132ML6	4.3
34	85	1158	2.3	CB180	T132S2	8.5
34	85	1158	1.6	CB150	T132S2	6.2
34	85	1128	1.1	CB130	T132S2	4.3
34	85	1162	2.3	CB180	T112B2	8.5
34	85	1162	1.6	CB150	T112B2	6.2
34	85	1132	1.1	CB130	T112B2	4.3
34	42	1210	4.4	CB215	T112BL4	12
33	43	1224	0.6	CB110	T112BL4	3.8
33	90	1291	5.9	CB250	T132S2	19
32	90	1295	5.8	CB250	T112B2	19
32	30	1348	4.2	R250	T132ML6	23
30	98	1230	2.4	R250	T132S2	13
30	49	1357	3.7	R250	T132S4	17
30	49	1304	1.6	R180	T132S4	8.0
30	49	1252	1.1	R150	T132S4	5.5
29	49	1269	1.0	R150	T112BL4	5.5
29	49	1251	0.7	R130	T112BL4	3.6
29	100	1255	1.7	R215	T132S2	8.5
29	100	1165	1.1	R180	T132S2	5.6
29	100	1183	0.7	R150	T132S2	3.9
29	50	1367	2.3	R215	T132S4	11
29	50	1403	1.6	CB150	T132S4	6.7
29	50	1403	1.0	CB130	T132S4	5.1
29	100	1187	0.7	R150	T112B2	3.9
29	50	1423	1.6	CB150	T112BL4	6.7
29	50	1423	1.0	CB130	T112BL4	5.1
28	52	1478	5.4	CB250	T132S4	18
28	52	1478	2.2	CB180	T132S4	9.7
28	52	1499	5.3	CB250	T112BL4	18
28	52	1499	2.2	CB180	T112BL4	9.7
28	53	1506	3.7	CB215	T132S4	12
27	107	1439	2.0	CB180	T132S2	8.2
27	107	1444	2.0	CB180	T112B2	8.2
27	53	1527	3.7	CB215	T112BL4	12
27	109	1544	5.2	CB250	T132S2	18
27	109	1549	5.2	CB250	T112B2	18
26	37	1563	2.1	CB180	T132ML6	9.3
26	112	1566	3.4	CB215	T132S2	11
26	112	1572	3.4	CB215	T112B2	11
26	56	1471	1.4	R180	T132S4	7.7
26	56	1471	0.9	R150	T132S4	5.5
26	56	1492	0.9	R150	T112BL4	5.5
26	57	1518	2.0	R215	T132S4	9.9
26	38	1625	4.9	CB250	T132ML6	18
25	115	1546	1.3	CB150	T132S2	5.9
25	115	1505	0.9	CB130	T132S2	4.2
25	115	1552	1.3	CB150	T112B2	5.9
25	115	1510	0.9	CB130	T112B2	4.2
25	58	1607	1.4	CB150	T132S4	6.4
25	58	1607	0.9	CB130	T132S4	4.9
25	58	1629	1.4	CB150	T112BL4	6.4
25	58	1629	0.9	CB130	T112BL4	4.9
24	120	1635	4.4	CB250	T132S2	16
24	120	1641	4.4	CB250	T112B2	16
24	60	1641	2.9	R250	T132S4	17

1.7 - Getriebemotoren

n_2 min^{-1}	ir	T2 Nm	FS'		5.5 kW	Ptn kW
24	40	1668	3.5	R250	T132ML6	17
24	40	1668	2.2	R215	T132ML6	11
24	40	1581	1.5	R180	T132ML6	7.7
24	40	1689	1.4	CB150	T132ML6	6.7
24	40	1581	1.0	R150	T132ML6	5.5
24	40	1668	0.9	CB130	T132ML6	4.7
24	40	1538	0.7	R130	T132ML6	3.7
24	121	1649	3.0	CB215	T132S2	10
24	121	1654	3.0	CB215	T112B2	10
24	124	1667	1.8	CB180	T132S2	8.2
24	62	1762	4.7	CB250	T132S4	18
24	62	1740	3.4	CB215	T132S4	11
24	62	1740	1.8	CB180	T132S4	9.3
24	124	1673	1.8	CB180	T112B2	8.2
23	62	1786	4.6	CB250	T112BL4	18
23	62	1764	3.3	CB215	T112BL4	11
23	62	1764	1.8	CB180	T112BL4	9.3
23	42	1774	3.4	CB215	T132ML6	11
21	69	1837	1.7	R215	T132S4	9.9
21	70	1788	2.5	R250	T132S4	14
21	70	1712	1.1	R180	T132S4	6.5
21	70	1687	0.7	R150	T132S4	4.5
21	70	1711	0.7	R150	T112BL4	4.5
20	144	1910	1.1	CB150	T132S2	5.7
20	144	1858	0.7	CB130	T132S2	4.0
20	72	1994	1.2	CB150	T132S4	6.4
20	144	1917	1.1	CB150	T112B2	5.7
20	72	1969	0.8	CB130	T132S4	4.7
20	144	1865	0.7	CB130	T112B2	4.0
20	145	1975	3.8	CB250	T132S2	16
20	145	1982	3.8	CB250	T112B2	16
20	146	1989	2.6	CB215	T132S2	10
20	146	1996	2.6	CB215	T112B2	10
20	72	2022	1.2	CB150	T112BL4	6.4
20	72	1996	0.8	CB130	T112BL4	4.7
19.8	49	1990	2.9	R250	T132ML6	16
19.8	49	1910	1.3	R180	T132ML6	7.4
19.8	49	1831	0.8	R150	T132ML6	4.8
19.5	150	1990	1.6	CB180	T132S2	7.9
19.5	75	2104	2.9	CB215	T132S4	11
19.5	75	2077	1.6	CB180	T132S4	8.9
19.5	150	1996	1.6	CB180	T112B2	7.9
19.4	50	2004	1.8	R215	T132ML6	9.9
19.4	50	2085	1.2	CB150	T132ML6	6.4
19.4	50	2085	0.8	CB130	T132ML6	4.5
19.2	75	2134	2.9	CB215	T112BL4	11
19.2	75	2107	1.6	CB180	T112BL4	8.9
18.7	78	2189	4.0	CB250	T132S4	17
18.7	52	2197	4.1	CB250	T132ML6	17
18.7	52	2197	1.7	CB180	T132ML6	9.3
18.5	79	1961	2.0	R250	T132S4	13
18.5	78	2219	4.0	CB250	T112BL4	17
18.3	53	2210	2.9	CB215	T132ML6	11
18.3	80	2187	2.7	CB215	T132S4	10
18.3	80	1957	1.4	R215	T132S4	8.0
18.3	80	1928	0.9	R180	T132S4	6.3
18.1	162	1945	1.0	CB150	T132S2	4.5
18.1	162	1887	0.6	CB130	T132S2	3.2
18.0	162	1953	0.9	CB150	T112B2	4.5
18.0	162	1894	0.6	CB130	T112B2	3.2
18.0	80	2218	2.6	CB215	T112BL4	10
17.3	56	2153	1.1	R180	T132ML6	7.2
17.3	56	2062	0.7	R150	T132ML6	4.7
17.2	85	2262	1.5	CB180	T132S4	7.9
17.2	85	2232	1.0	CB150	T132S4	5.5
17.2	85	2202	0.7	CB130	T132S4	4.0
17.0	57	2191	1.6	R215	T132ML6	8.8
16.9	85	2295	1.4	CB180	T112BL4	7.9
16.9	85	2264	1.0	CB150	T112BL4	5.5
16.9	85	2232	0.6	CB130	T112BL4	4.0
16.8	174	1965	2.4	CB215	T132S2	6.8
16.8	174	2121	1.3	CB180	T132S2	6.4
16.8	174	1972	2.4	CB215	T112B2	6.8
16.8	174	2129	1.3	CB180	T112B2	6.4
16.7	58	2388	1.0	CB150	T132ML6	6.2
16.7	58	2388	0.7	CB130	T132ML6	4.3
16.6	177	2349	3.0	CB250	T132S2	15
16.5	177	2356	3.0	CB250	T112B2	15
16.2	90	2526	3.6	CB250	T132S4	17
16.2	60	2404	2.3	R250	T132ML6	15

1.7 - Motoriduttori

n_2 min^{-1}	ir	T2 Nm	FS'		5.5 kW		Ptn kW
16.0	90	2561	3.6	CB250	T112BL4		17
15.7	62	2618	3.6	CB250	T132ML6		17
15.7	62	2584	2.5	CB215	T132ML6		11
15.7	62	2584	1.4	CB180	T132ML6		8.9
14.9	98	2432	1.6	R250	T132S4		13
14.6	100	2447	1.1	R215	T132S4		8.0
14.6	100	2267	0.7	R180	T132S4		5.6
14.5	202	2391	0.8	CB150	T132S2		4.4
14.5	202	2397	0.8	CB150	T112B2		4.4
14.2	207	2524	2.7	CB250	T132S2		12
14.1	207	2531	2.7	CB250	T112B2		12
14.1	69	2652	1.4	R215	T132ML6		8.8
13.9	70	2577	1.9	R250	T132ML6		12
13.9	70	2501	0.9	R180	T132ML6		6.1
13.8	213	2596	1.6	CB215	T132S2		7.8
13.8	213	2481	1.1	CB180	T132S2		5.8
13.7	213	2605	1.6	CB215	T112B2		7.8
13.7	213	2490	1.1	CB180	T112B2		5.8
13.6	107	2811	1.2	CB180	T132S4		7.6
13.5	72	2924	0.9	CB150	T132ML6		5.9
13.5	107	2849	1.2	CB180	T112BL4		7.6
13.4	109	3060	3.1	CB250	T132S4		17
13.2	109	3101	3.1	CB250	T112BL4		17
13.0	112	3021	2.1	CB215	T132S4		10
12.9	75	3087	2.2	CB215	T132ML6		10
12.9	75	3087	1.2	CB180	T132ML6		8.5
12.9	112	3063	2.1	CB215	T112BL4		10
12.7	115	2978	0.8	CB150	T132S4		5.3
12.7	231	2651	0.7	CB150	T132S2		4.1
12.6	231	2659	0.7	CB150	T112B2		4.1
12.5	115	3021	0.8	CB150	T112BL4		5.3
12.4	78	3251	3.0	CB250	T132ML6		16
12.3	79	2866	1.6	R250	T132ML6		12
12.2	240	2882	2.5	CB250	T132S2		11
12.2	120	3194	2.7	CB250	T132S4		15
12.2	240	2892	2.5	CB250	T112B2		11
12.1	80	3250	2.0	CB215	T132ML6		10
12.1	80	2773	1.2	R215	T132ML6		7.1
12.1	80	2817	0.7	R180	T132ML6		5.9
12.1	121	3220	1.8	CB215	T132S4		9.6
12.0	120	3239	2.7	CB250	T112BL4		15
11.9	121	3266	1.8	CB215	T112BL4		9.6
11.8	248	2980	1.5	CB215	T132S2		7.6
11.8	248	2847	1.0	CB180	T132S2		5.7
11.8	248	2990	1.5	CB215	T112B2		7.6
11.8	124	3213	1.1	CB180	T132S4		7.3
11.8	248	2856	1.0	CB180	T112B2		5.7
11.6	124	3258	1.1	CB180	T112BL4		7.3
11.4	85	3315	1.1	CB180	T132ML6		7.3
11.4	85	3314	0.8	CB150	T132ML6		5.3
11.2	261	2947	1.0	CB180	T132S2		5.5
11.2	261	2957	1.0	CB180	T112B2		5.5
11.0	267	3112	1.4	CB215	T132S2		7.2
10.9	267	3121	1.4	CB215	T112B2		7.2
10.8	90	3752	2.7	CB250	T132ML6		16
10.7	136	3277	1.9	110/215	T132S4		6.0
10.6	136	3323	1.8	110/215	T112BL4		6.0
10.4	140	3274	2.8	130/250	T132S4		9.1
10.4	140	3273	1.1	110/180	T132S4		6.0
10.4	140	3374	1.1	130/180	T132S4		9.1
10.4	140	3274	0.8	110/150	T132S4		6.0
10.3	140	3318	2.7	130/250	T112BL4		9.1
10.3	140	3318	1.1	110/180	T112BL4		6.0
10.3	140	3318	1.1	85/180	T112BL4		3.4
10.3	140	3420	1.1	130/180	T112BL4		9.1
10.3	140	3267	0.8	85/150	T112BL4		3.4
10.3	140	3318	0.8	110/150	T112BL4		6.0
10.2	288	3202	0.7	CB150	T132S2		3.9
10.1	144	3678	0.7	CB150	T132S4		5.1
10.1	288	3211	0.7	CB150	T112B2		3.9
10.1	290	3380	2.1	CB250	T132S2		11
10.1	145	3860	2.4	CB250	T132S4		15
10.1	290	3390	2.1	CB250	T112B2		11
10.0	146	3835	1.6	CB215	T132S4		9.3
10.0	144	3730	0.7	CB150	T112BL4		5.1
9.9	145	3914	2.3	CB250	T112BL4		15
9.9	98	3555	1.3	R250	T132ML6		12
9.9	146	3889	1.6	CB215	T112BL4		9.3
9.8	300	3548	1.3	CB215	T132S2		7.4
9.7	300	3563	1.3	CB215	T112B2		7.4

1.7 - *Gearmotors*

n_2 min^{-1}	ir	T2 Nm	FS'		5.5 kW		Ptn kW
9.7	150	3886	1.0	CB180	T132S4		7.3
9.7	100	3465	0.9	R215	T132ML6		7.1
9.6	304	3378	0.9	CB180	T132S2		5.4
9.6	304	3388	0.9	CB180	T112B2		5.4
9.6	150	3939	1.0	CB180	T112BL4		7.3
9.1	107	4111	0.9	CB180	T132ML6		7.0
9.0	162	3672	0.6	CB150	T132S4		4.0
8.9	109	4544	2.3	CB250	T132ML6		16
8.7	112	4488	1.6	CB215	T132ML6		9.6
8.4	115	4361	0.6	CB150	T132ML6		4.9
8.4	174	3944	1.4	CB215	T132S4		6.8
8.4	174	4069	0.8	CB180	T132S4		5.8
8.3	174	3996	1.4	CB215	T112BL4		6.8
8.3	174	4123	0.8	CB180	T112BL4		5.8
8.3	177	4584	1.8	CB250	T132S4		14
8.1	360	4130	1.8	CB250	T132S2		11
8.1	177	4646	1.8	CB250	T112BL4		14
8.1	360	4145	1.8	CB250	T112B2		11
8.1	120	4746	2.0	CB250	T132ML6		14
8.0	121	4715	1.4	CB215	T132ML6		8.9
8.0	368	4025	0.8	CB180	T132S2		5.2
7.9	368	4040	0.8	CB180	T112B2		5.2
7.8	124	4769	0.8	CB180	T132ML6		7.0
7.8	375	4237	1.1	CB215	T132S2		6.8
7.8	375	4248	1.1	CB215	T112B2		6.8
7.5	195	4558	1.5	110/215	T132S4		5.6
7.4	195	4626	1.4	110/215	T112BL4		5.6
7.3	200	4317	2.3	130/250	T132S4		8.4
7.3	200	4533	0.9	110/180	T132S4		5.6
7.3	200	4605	0.9	130/180	T132S4		8.4
7.3	200	4461	0.6	110/150	T132S4		5.6
7.2	200	4377	2.2	130/250	T112BL4		8.4
7.2	200	4523	0.9	85/180	T112BL4		3.2
7.2	200	4596	0.9	110/180	T112BL4		5.6
7.2	200	4669	0.9	130/180	T112BL4		8.4
7.2	200	4451	0.6	85/150	T112BL4		3.2
7.2	200	4523	0.6	110/150	T112BL4		5.6
7.1	207	4843	1.7	CB250	T132S4		11
7.0	420	4590	0.7	CB180	T132S2		5.2
7.0	207	4905	1.7	CB250	T112BL4		11
7.0	420	4610	0.7	CB180	T112B2		5.2
6.9	213	4907	1.0	CB215	T132S4		7.0
6.9	428	4677	0.9	CB215	T132S2		6.4
6.9	213	4677	0.7	CB180	T132S4		5.2
6.8	428	4698	0.9	CB215	T112B2		6.4
6.8	213	4972	1.0	CB215	T112BL4		7.0
6.8	213	4740	0.7	CB180	T112BL4		5.2
6.8	434	4436	0.6	CB180	T132S2		4.7
6.7	435	4910	1.4	CB250	T132S2		10
6.7	435	4931	1.4	CB250	T112B2		10
6.7	145	5653	1.8	CB250	T132ML6		14
6.6	146	5617	1.2	CB215	T132ML6		8.6
6.5	150	5683	0.7	CB180	T132ML6		6.8
6.1	240	5529	1.5	CB250	T132S4		11
6.0	240	5603	1.5	CB250	T112BL4		11
5.9	248	5618	0.9	CB215	T132S4		6.8
5.9	248	5351	0.6	CB180	T132S4		5.1
5.8	248	5696	0.9	CB215	T112BL4		6.8
5.8	248	5425	0.6	CB180	T112BL4		5.1
5.8	508	5189	1.0	CB250	T132S2		8.8
5.8	508	5207	1.0	CB250	T112B2		8.8
5.7	518	5567	0.8	CB215	T132S2		6.3
5.6	518	5587	0.8	CB215	T112B2		6.3
5.6	261	5544	0.6	CB180	T132S4		5.0
5.6	174	5941	1.0	CB215	T132ML6		6.8
5.6	174	5941	0.6	CB180	T132ML6		5.5
5.5	261	5614	0.6	CB180	T112BL4		5.0
5.5	177	6710	1.4	CB250	T132ML6		13
5.5	267	5858	0.9	CB215	T132S4		6.4
5.4	267	5945	0.9	CB215	T112BL4		6.4
5.2	280	5545	0.7	110/180	T132S4		5.6
5.2	280	5747	0.6	130/180	T132S4		8.4
5.1	280	5620	0.7	110/180	T112BL4		5.6
5.1	280	5620	0.7	85/180	T112BL4		3.2
5.1	280	5824	0.6	130/180	T112BL4		8.4
5.1	573	5653	1.0	CB250	T132S2		8.4
5.1	573	5665	1.0	CB250	T112B2		8.4
5.0	290	6474	1.3	CB250	T132S4		11
5.0	293	6433	1.1	110/215	T132S4		5.6
5.0	290	6553	1.3	CB250	T112BL4		11

1.7 - Getriebemotoren

n_2 min^{-1}	ir	T2 Nm	FS'		5.5 kW		Ptn kW
4.9	293	6526	1.1	110/215	T112BL4		5.6
4.9	600	5704	0.7	CB215	T132S2		5.3
4.9	300	6579	1.6	130/250	T132S4		8.4
4.9	300	6687	0.8	CB215	T132S4		6.6
4.9	600	5716	0.7	CB215	T112B2		5.3
4.8	300	6675	1.6	130/250	T112BL4		8.4
4.8	300	6784	0.8	CB215	T112BL4		6.6
4.7	207	7056	1.3	CB250	T132ML6		10
4.6	213	7157	0.8	CB215	T132ML6		6.6
4.1	710	6994	0.8	CB250	T132S2		8.4
4.1	710	7029	0.8	CB250	T112B2		8.4
4.1	360	7891	1.1	CB250	T132S4		9.7
4.0	240	8190	1.1	CB250	T132ML6		10
4.0	360	8010	1.1	CB250	T112BL4		9.7
3.9	248	8194	0.7	CB215	T132ML6		6.4
3.9	375	7967	0.7	CB215	T132S4		6.1
3.8	375	8069	0.7	CB215	T112BL4		6.1
3.7	390	8540	0.8	110/215	T112BL4		4.4
3.7	400	7627	1.4	130/250	T132S4		6.4
3.6	267	8393	0.7	CB215	T132ML6		6.0
3.6	400	7733	1.4	130/250	T112BL4		6.4
3.4	435	9223	0.9	CB250	T132S4		9.2
3.3	290	9435	1.0	CB250	T132ML6		10
3.3	435	9363	0.9	CB250	T112BL4		9.2
3.2	300	9756	0.6	CB215	T132ML6		6.3
2.9	508	9701	0.6	CB250	T132S4		8.1
2.8	508	9836	0.6	CB250	T112BL4		8.1
2.7	360	11520	0.8	CB250	T132ML6		9.2
2.6	573	10504	0.6	CB250	T132S4		7.7
2.5	573	10672	0.6	CB250	T112BL4		7.7
2.4	600	9942	1.0	130/250	T132S4		6.8
2.4	600	10068	1.0	130/250	T112BL4		6.8
2.2	435	13426	0.7	CB250	T132ML6		8.8
1.5	980	17152	0.6	130/250	T112BL4		3.6

1.7 - Motoriduttori

n_2 min^{-1}	ir	T2 Nm	FS'		7.5 kW	Ptn kW
419	7	150.6	5.0	R150	T112BL2	12
419	7	150.6	3.3	R130	T112BL2	9.1
419	7	147.2	2.3	R110	T112BL2	6.0
419	7	147.2	1.2	R85	T112BL2	3.4
419	7	147.1	0.6	R70	T112BL2	2.5
417	7	151.1	5.0	R150	T132SL2	12
417	7	151.1	3.3	R130	T132SL2	9.1
417	7	147.7	2.3	R110	T132SL2	6.0
293	10	212.7	4.0	R150	T112BL2	11
293	10	212.7	2.7	R130	T112BL2	8.4
293	10	207.8	1.9	R110	T112BL2	5.6
293	10	207.8	1.0	R85	T112BL2	3.2
292	10	215.9	5.5	R180	T132SL2	17
292	10	213.4	4.0	R150	T132SL2	11
292	10	213.4	2.7	R130	T132SL2	8.4
292	10	208.5	1.9	R110	T132SL2	5.6
209	7	305.6	4.9	R180	T132M4	19
209	7	302.2	3.5	R150	T132M4	12
209	7	302.2	2.3	R130	T132M4	9.1
209	7	295.3	1.6	R110	T132M4	6.0
195	15	311.7	3.0	R150	T112BL2	9.9
195	15	308.0	2.0	R130	T112BL2	6.8
195	15	304.4	1.3	R110	T112BL2	4.6
195	15	300.7	0.7	R85	T112BL2	2.7
195	15	316.4	4.2	R180	T132SL2	15
195	15	312.7	3.0	R150	T132SL2	9.9
195	15	309.1	2.0	R130	T132SL2	6.8
195	15	305.4	1.3	R110	T132SL2	4.6
147	20	410.7	2.6	R150	T112BL2	9.3
147	20	405.8	1.7	R130	T112BL2	6.4
147	20	400.9	1.2	R110	T112BL2	4.4
146	20	426.8	5.9	R215	T132SL2	20
146	10	431.7	3.8	R180	T132M4	17
146	20	412.1	3.7	R180	T132SL2	13
146	10	426.8	2.8	R150	T132M4	11
146	20	412.1	2.6	R150	T132SL2	9.3
146	10	426.8	1.9	R130	T132M4	8.4
146	20	407.2	1.7	R130	T132SL2	6.4
146	10	417.0	1.3	R110	T132M4	5.6
137	7	464.8	6.2	R215	T160M6	23
137	7	459.6	4.0	R180	T160M6	17
137	7	454.4	2.9	R150	T160M6	11
105	28	527.1	1.8	R150	T112BL2	6.2
105	28	520.2	1.2	R130	T112BL2	4.5
105	28	527.0	0.8	R110	T112BL2	3.3
104	28	590.6	4.1	R215	T132SL2	18
104	28	549.4	2.5	R180	T132SL2	9.9
104	28	528.8	1.8	R150	T132SL2	6.2
104	28	522.0	1.2	R130	T132SL2	4.5
97	30	625.5	5.8	R250	T132SL2	26
97	15	647.6	5.1	R215	T132M4	21
97	15	632.9	2.8	R180	T132M4	15
97	15	625.5	2.0	R150	T132M4	9.9
97	15	618.1	1.4	R130	T132M4	6.8
97	15	603.5	0.9	R110	T132M4	4.6
96	10	656.6	5.6	R215	T160M6	21
96	10	649.1	3.1	R180	T160M6	16
96	10	641.6	2.2	R150	T160M6	11
79	37	732.6	3.2	CB180	T112BL2	11
79	37	735.1	3.2	CB180	T132SL2	11
73	40	792.0	2.1	CB150	T112BL2	7.8
73	40	743.1	1.4	R150	T112BL2	6.0
73	40	782.3	1.4	CB130	T112BL2	5.6
73	40	723.6	1.0	R130	T112BL2	4.0
73	40	723.6	0.7	R110	T112BL2	3.0
73	20	843.8	5.7	R250	T132M4	28
73	40	784.9	4.8	R250	T132SL2	20
73	20	843.8	3.9	R215	T132M4	18
73	40	794.7	3.0	R215	T132SL2	13
73	20	824.2	2.5	R180	T132M4	13
73	40	794.7	2.1	CB150	T132SL2	7.8
73	40	735.9	2.1	R180	T132SL2	8.3
73	20	824.2	1.7	R150	T132M4	9.3
73	40	745.7	1.4	R150	T132SL2	6.0
73	40	784.9	1.4	CB130	T132SL2	5.6
73	20	814.3	1.1	R130	T132M4	6.4
73	40	726.1	1.0	R130	T132SL2	4.0
70	42	831.6	5.1	CB215	T112BL2	13
70	42	834.5	5.1	CB215	T132SL2	13
68	43	840.9	0.8	CB110	T112BL2	4.2

1.7 - *Gearmotors*

n_2 min^{-1}	ir	T2 Nm	FS'		7.5 kW	Ptn kW
64	15	984.8	6.1	R250	T160M6	33
64	15	973.6	4.0	R215	T160M6	20
64	15	951.3	2.3	R180	T160M6	14
64	15	928.9	1.6	R150	T160M6	8.8
60	49	886.3	1.2	R150	T112BL2	5.5
60	49	862.3	0.8	R130	T112BL2	3.6
60	49	937.5	4.1	R250	T132SL2	18
60	49	889.5	1.8	R180	T132SL2	8.0
60	49	889.4	1.1	R150	T132SL2	5.5
59	50	977.8	1.9	CB150	T112BL2	7.4
59	50	965.6	1.2	CB130	T112BL2	5.3
58	50	956.6	2.5	R215	T132SL2	12
58	50	981.1	1.9	CB150	T132SL2	7.4
58	50	968.9	1.2	CB130	T132SL2	5.3
57	51	997.5	0.6	CB110	T112BL2	4.2
56	52	1030	6.1	CB250	T112BL2	20
56	52	1030	2.6	CB180	T112BL2	11
56	52	1033	6.1	CB250	T132SL2	20
56	52	1033	2.6	CB180	T132SL2	11
55	53	1050	4.4	CB215	T112BL2	13
55	53	1053	4.3	CB215	T132SL2	13
52	56	1013	1.0	R150	T112BL2	5.5
52	56	986	0.6	R130	T112BL2	3.5
52	28	1168	2.7	R215	T132M4	17
52	28	1085	1.7	R180	T132M4	9.9
52	56	1017	1.6	R180	T132SL2	7.7
52	28	1044	1.2	R150	T132M4	6.2
52	56	1017	1.0	R150	T132SL2	5.5
52	28	1044	0.8	R130	T132M4	4.5
51	57	1063	2.1	R215	T132SL2	11
51	58	1120	1.6	CB150	T112BL2	7.1
51	58	1120	1.1	CB130	T112BL2	5.3
50	58	1124	1.6	CB150	T132SL2	7.1
50	58	1124	1.1	CB130	T132SL2	5.3
49	30	1236	3.9	R250	T132M4	25
49	60	1133	3.2	R250	T132SL2	17
48	20	1268	4.5	R250	T160M6	26
48	20	1268	3.1	R215	T160M6	17
48	20	1239	1.9	R180	T160M6	12
47	62	1228	5.5	CB250	T112BL2	20
47	62	1212	4.0	CB215	T112BL2	13
47	62	1212	2.2	CB180	T112BL2	10
47	62	1232	5.4	CB250	T132SL2	20
47	62	1217	3.9	CB215	T132SL2	13
47	62	1217	2.1	CB180	T132SL2	10
42	69	1286	1.9	R215	T132SL2	11
42	70	1198	0.8	R150	T112BL2	4.5
42	70	1236	2.8	R250	T132SL2	14
42	70	1236	1.2	R180	T132SL2	6.5
42	70	1202	0.8	R150	T132SL2	4.5
41	72	1391	1.4	CB150	T112BL2	7.1
41	72	1373	0.9	CB130	T112BL2	5.1
41	72	1395	1.4	CB150	T132SL2	7.1
41	72	1377	0.9	CB130	T132SL2	5.1
39	37	1452	2.0	CB180	T132M4	10
39	75	1467	3.5	CB215	T112BL2	13
39	75	1448	1.9	CB180	T112BL2	9.7
39	75	1472	3.5	CB215	T132SL2	13
39	75	1453	1.9	CB180	T132SL2	9.7
38	38	1491	4.7	CB250	T132M4	19
38	78	1526	4.7	CB250	T112BL2	19
37	78	1531	4.7	CB250	T132SL2	19
37	79	1357	2.2	R250	T132SL2	13
37	80	1545	3.1	CB215	T112BL2	12
37	80	1350	0.7	R150	T112BL2	4.4
37	40	1550	3.2	R250	T132M4	19
37	80	1550	3.1	CB215	T132SL2	12
37	40	1550	2.0	R215	T132M4	12
37	80	1374	1.6	R215	T132SL2	8.5
37	40	1472	1.4	R180	T132M4	8.3
37	40	1550	1.3	CB150	T132M4	7.1
37	80	1354	1.1	R180	T132SL2	6.3
37	40	1472	1.0	R150	T132M4	6.0
37	40	1531	0.9	CB130	T132M4	5.1
37	80	1354	0.7	R150	T132SL2	4.4
37	40	1432	0.6	R130	T132M4	4.0
35	42	1628	3.2	CB215	T132M4	12
34	85	1579	1.7	CB180	T112BL2	8.5
34	85	1579	1.2	CB150	T112BL2	6.2
34	85	1538	0.8	CB130	T112BL2	4.3

1.7 - Getriebemotoren

n_2 min^{-1}	ir	T2 Nm	FS'		7.5 kW	Ptn kW
34	85	1585	1.7	CB180	T132SL2	8.5
34	85	1585	1.2	CB150	T132SL2	6.2
34	85	1543	0.8	CB130	T132SL2	4.3
34	28	1755	1.8	R215	T160M6	16
34	28	1608	1.4	R180	T160M6	9.0
33	90	1760	4.3	CB250	T112BL2	19
32	90	1766	4.3	CB250	T132SL2	19
32	30	1858	3.1	R250	T160M6	23
30	49	1851	2.7	R250	T132M4	17
30	98	1683	1.8	R250	T132SL2	13
30	49	1779	1.2	R180	T132M4	8.0
30	49	1707	0.8	R150	T132M4	5.5
29	50	1864	1.7	R215	T132M4	11
29	100	1717	1.3	R215	T132SL2	8.5
29	50	1913	1.2	CB150	T132M4	6.7
29	100	1594	0.8	R180	T132SL2	5.6
29	50	1913	0.8	CB130	T132M4	5.1
28	52	2015	3.9	CB250	T132M4	18
28	52	2015	1.6	CB180	T132M4	9.7
28	53	2054	2.7	CB215	T132M4	12
27	107	1962	1.5	CB180	T112BL2	8.2
27	107	1969	1.5	CB180	T132SL2	8.2
27	109	2105	3.8	CB250	T112BL2	18
27	109	2112	3.8	CB250	T132SL2	18
26	112	2136	2.5	CB215	T112BL2	11
26	112	2143	2.5	CB215	T132SL2	11
26	56	2006	1.0	R180	T132M4	7.7
26	56	2006	0.7	R150	T132M4	5.5
26	37	2153	1.6	CB180	T160M6	9.3
26	57	2070	1.4	R215	T132M4	9.9
25	115	2108	1.0	CB150	T112BL2	5.9
25	115	2052	0.6	CB130	T112BL2	4.2
25	115	2116	1.0	CB150	T132SL2	5.9
25	115	2059	0.6	CB130	T132SL2	4.2
25	38	2240	3.6	CB250	T160M6	18
25	58	2191	1.0	CB150	T132M4	6.4
25	58	2191	0.7	CB130	T132M4	4.9
24	120	2229	3.2	CB250	T112BL2	16
24	120	2237	3.2	CB250	T132SL2	16
24	60	2237	2.1	R250	T132M4	17
24	121	2249	2.2	CB215	T112BL2	10
24	121	2256	2.2	CB215	T132SL2	10
24	40	2298	2.5	R250	T160M6	17
24	40	2298	1.6	R215	T160M6	11
24	40	2179	1.1	R180	T160M6	7.7
24	40	2328	1.0	CB150	T160M6	6.7
24	40	2298	0.7	CB130	T160M6	4.7
24	124	2273	1.3	CB180	T112BL2	8.2
24	62	2403	3.5	CB250	T132M4	18
24	62	2372	2.5	CB215	T132M4	11
24	62	2372	1.3	CB180	T132M4	9.3
24	124	2281	1.3	CB180	T132SL2	8.2
23	42	2444	2.4	CB215	T160M6	11
21	69	2505	1.2	R215	T132M4	9.9
21	70	2438	1.8	R250	T132M4	14
21	70	2335	0.8	R180	T132M4	6.5
20	144	2605	0.8	CB150	T112BL2	5.7
20	72	2720	0.9	CB150	T132M4	6.4
20	144	2613	0.8	CB150	T132SL2	5.7
20	145	2694	2.8	CB250	T112BL2	16
20	145	2703	2.8	CB250	T132SL2	16
20	146	2712	1.9	CB215	T112BL2	10
20	146	2722	1.9	CB215	T132SL2	10
20	49	2742	2.1	R250	T160M6	16
20	49	2633	0.9	R180	T160M6	7.4
20	150	2714	1.2	CB180	T112BL2	7.9
19.5	75	2869	2.1	CB215	T132M4	11
19.5	75	2833	1.2	CB180	T132M4	8.9
19.5	150	2722	1.2	CB180	T132SL2	7.9
19.2	50	2760	1.3	R215	T160M6	9.9
19.2	50	2872	0.9	CB150	T160M6	6.4
18.7	78	2984	3.0	CB250	T132M4	17
18.5	79	2674	1.5	R250	T132M4	13
18.5	52	3026	3.0	CB250	T160M6	17
18.5	52	3026	1.2	CB180	T160M6	9.3
18.3	80	2983	2.0	CB215	T132M4	10
18.3	80	2669	1.0	R215	T132M4	8.0
18.3	80	2629	0.7	R180	T132M4	6.3
18.1	53	3045	2.1	CB215	T160M6	11
18.1	162	2653	0.7	CB150	T112BL2	4.5

1.7 - Motoriduttori

n_2 min^{-1}	ir	T2 Nm	FS'		7.5 kW	Ptn kW
18.0	162	2663	0.7	CB150	T132SL2	4.5
17.2	85	3085	1.1	CB180	T132M4	7.9
17.2	85	3043	0.8	CB150	T132M4	5.5
17.1	56	2967	0.8	R180	T160M6	7.2
16.8	174	2680	1.7	CB215	T112BL2	6.8
16.8	57	3020	1.1	R215	T160M6	8.8
16.8	174	2892	1.0	CB180	T112BL2	6.4
16.8	174	2689	1.7	CB215	T132SL2	6.8
16.8	174	2903	1.0	CB180	T132SL2	6.4
16.6	177	3203	2.2	CB250	T112BL2	15
16.6	58	3289	0.8	CB150	T160M6	6.2
16.5	177	3212	2.2	CB250	T132SL2	15
16.2	90	3444	2.7	CB250	T132M4	17
16.0	60	3313	1.7	R250	T160M6	15
15.5	62	3609	2.6	CB250	T160M6	17
15.5	62	3563	1.8	CB215	T160M6	11
15.5	62	3563	1.0	CB180	T160M6	8.9
14.9	98	3317	1.2	R250	T132M4	13
14.6	100	3336	0.8	R215	T132M4	8.0
14.5	202	3261	0.6	CB150	T112BL2	4.4
14.5	202	3269	0.6	CB150	T132SL2	4.4
14.2	207	3442	2.0	CB250	T112BL2	12
14.1	207	3452	2.0	CB250	T132SL2	12
13.9	69	3656	1.0	R215	T160M6	8.8
13.8	213	3540	1.2	CB215	T112BL2	7.8
13.8	213	3383	0.8	CB180	T112BL2	5.8
13.7	70	3553	1.4	R250	T160M6	12
13.7	213	3552	1.2	CB215	T132SL2	7.8
13.7	213	3396	0.8	CB180	T132SL2	5.8
13.7	70	3448	0.6	R180	T160M6	6.1
13.6	107	3834	0.9	CB180	T132M4	7.6
13.4	109	4172	2.3	CB250	T132M4	17
13.3	72	4030	0.6	CB150	T160M6	5.9
13.0	112	4120	1.5	CB215	T132M4	10
12.8	75	4253	1.6	CB215	T160M6	10
12.8	75	4253	0.9	CB180	T160M6	8.5
12.7	115	4061	0.6	CB150	T132M4	5.3
12.3	78	4480	2.2	CB250	T160M6	16
12.2	240	3930	1.8	CB250	T112BL2	11
12.2	120	4355	2.0	CB250	T132M4	15
12.2	240	3943	1.8	CB250	T132SL2	11
12.2	79	3950	1.1	R250	T160M6	12
12.1	121	4391	1.4	CB215	T132M4	9.6
12.0	80	4477	1.4	CB215	T160M6	10
12.0	80	3820	0.8	R215	T160M6	7.1
11.8	248	4064	1.1	CB215	T112BL2	7.6
11.8	248	3882	0.7	CB180	T112BL2	5.7
11.8	248	4077	1.1	CB215	T132SL2	7.6
11.8	124	4382	0.8	CB180	T132M4	7.3
11.8	248	3894	0.7	CB180	T132SL2	5.7
11.3	85	4568	0.8	CB180	T160M6	7.3
11.2	261	4018	0.7	CB180	T112BL2	5.5
11.2	261	4032	0.7	CB180	T132SL2	5.5
11.0	267	4244	1.0	CB215	T112BL2	7.2
10.9	267	4255	1.0	CB215	T132SL2	7.2
10.7	136	4468	1.4	110/215	T132M4	6.0
10.7	90	5169	2.0	CB250	T160M6	16
10.4	140	4464	2.0	130/250	T132M4	9.1
10.4	140	4464	0.8	110/180	T132M4	6.0
10.4	140	4601	0.8	130/180	T132M4	9.1
10.1	290	4610	1.6	CB250	T112BL2	11
10.1	145	5263	1.7	CB250	T132M4	15
10.1	290	4623	1.6	CB250	T132SL2	11
10.0	146	5229	1.2	CB215	T132M4	9.3
9.8	98	4897	0.9	R250	T160M6	12
9.8	300	4839	1.0	CB215	T112BL2	7.4
9.7	300	4859	1.0	CB215	T132SL2	7.4
9.7	150	5300	0.7	CB180	T132M4	7.3
9.6	304	4606	0.6	CB180	T112BL2	5.4
9.6	304	4621	0.6	CB180	T132SL2	5.4
9.6	100	4775	0.6	R215	T160M6	7.1
9.0	107	5669	0.7	CB180	T160M6	7.0
8.8	109	6260	1.7	CB250	T160M6	16
8.6	112	6185	1.2	CB215	T160M6	9.6
8.4	174	5378	1.0	CB215	T132M4	6.8
8.3	177	6251	1.4	CB250	T132M4	14
8.1	360	5632	1.3	CB250	T112BL2	11
8.1	360	5653	1.3	CB250	T132SL2	11
8.0	120	6536	1.5	CB250	T160M6	14
7.9	121	6503	1.0	CB215	T160M6	8.9

1.7 - *Gearmotors*

n_2 min^{-1}	ir	T2 Nm	FS'		7.5 kW	Ptn kW
7.8	375	5778	0.8	CB215	T112BL2	6.8
7.8	375	5793	0.8	CB215	T132SL2	6.8
7.7	124	6570	0.6	CB180	T160M6	7.0
7.5	195	6215	1.1	110/215	T132M4	5.6
7.3	200	5887	1.7	130/250	T132M4	8.4
7.3	200	6181	0.7	110/180	T132M4	5.6
7.3	200	6279	0.7	130/180	T132M4	8.4
7.1	207	6603	1.2	CB250	T132M4	11
6.9	213	6692	0.8	CB215	T132M4	7.0
6.9	428	6378	0.7	CB215	T112BL2	6.4
6.8	428	6407	0.7	CB215	T132SL2	6.4
6.7	435	6695	1.0	CB250	T112BL2	10
6.7	435	6725	1.0	CB250	T132SL2	10
6.6	145	7790	1.3	CB250	T160M6	14
6.6	146	7728	0.9	CB215	T160M6	8.6
6.1	240	7540	1.1	CB250	T132M4	11
5.9	248	7661	0.7	CB215	T132M4	6.8
5.8	508	7076	0.7	CB250	T112BL2	8.8
5.8	508	7101	0.7	CB250	T132SL2	8.8
5.5	174	8175	0.8	CB215	T160M6	6.8
5.5	267	7988	0.6	CB215	T132M4	6.4
5.4	177	9251	1.0	CB250	T160M6	13
5.1	573	7709	0.7	CB250	T112BL2	8.4
5.1	573	7724	0.7	CB250	T132SL2	8.4
5.0	290	8828	1.0	CB250	T132M4	11
5.0	293	8773	0.8	110/215	T132M4	5.6
4.9	300	8971	1.2	130/250	T132M4	8.4
4.9	300	9118	0.6	CB215	T132M4	6.6
4.6	207	9725	0.9	CB250	T160M6	10
4.1	360	10761	0.8	CB250	T132M4	9.7
4.0	240	11281	0.8	CB250	T160M6	10
3.7	400	10400	1.0	130/250	T132M4	6.4
3.4	435	12576	0.6	CB250	T132M4	9.2
3.3	290	12984	0.7	CB250	T160M6	10
2.7	360	15829	0.6	CB250	T160M6	9.2
2.4	600	13558	0.8	130/250	T132M4	6.8

1.7 - Getriebemotoren

n_2 min^{-1}	ir	T2 Nm	FS'		9.2 kW	Ptn kW
209	7	379.1	6.3	R215	T132ML4	26
209	7	374.9	4.0	R180	T132ML4	19
209	7	370.7	2.9	R150	T132ML4	12
209	7	370.7	1.9	R130	T132ML4	9.1
209	7	362.3	1.3	R110	T132ML4	6.0
146	10	535.6	5.7	R215	T132ML4	23
146	10	529.6	3.1	R180	T132ML4	17
146	10	523.6	2.3	R150	T132ML4	11
146	10	523.5	1.5	R130	T132ML4	8.4
146	10	511.5	1.1	R110	T132ML4	5.6
97	15	803.4	6.2	R250	T132ML4	36
97	15	794.4	4.2	R215	T132ML4	21
97	15	776.3	2.3	R180	T132ML4	15
97	15	767.3	1.7	R150	T132ML4	10
97	15	758.2	1.1	R130	T132ML4	6.8
97	15	740.3	0.7	R110	T132ML4	4.6
73	20	1035	4.6	R250	T132ML4	28
73	20	1035	3.2	R215	T132ML4	18
73	20	1011	2.0	R180	T132ML4	13
73	20	1011	1.4	R150	T132ML4	9.3
73	20	999	0.9	R130	T132ML4	6.4
52	28	1432	2.2	R215	T132ML4	17
52	28	1331	1.4	R180	T132ML4	10
52	28	1281	1.0	R150	T132ML4	6.2
52	28	1281	0.6	R130	T132ML4	4.5
49	30	1516	3.2	R250	T132ML4	25
39	37	1781	1.7	CB180	T132ML4	10
38	38	1830	3.9	CB250	T132ML4	19
37	40	1902	2.6	R250	T132ML4	19
37	40	1902	1.6	R215	T132ML4	12
37	40	1805	1.1	R180	T132ML4	8.3
37	40	1902	1.1	CB150	T132ML4	7.1
37	40	1805	0.8	R150	T132ML4	6.0
37	40	1878	0.7	CB130	T132ML4	5.1
35	42	1997	2.6	CB215	T132ML4	12
30	49	2270	2.2	R250	T132ML4	17
30	49	2182	1.0	R180	T132ML4	8.0
30	49	2093	0.6	R150	T132ML4	5.5
29	50	2287	1.4	R215	T132ML4	11
29	50	2347	0.9	CB150	T132ML4	6.7
29	50	2347	0.6	CB130	T132ML4	5.1
28	52	2472	3.2	CB250	T132ML4	18
28	52	2472	1.3	CB180	T132ML4	10
28	53	2519	2.2	CB215	T132ML4	12
26	56	2460	0.9	R180	T132ML4	7.7
26	57	2539	1.2	R215	T132ML4	10
25	58	2688	0.8	CB150	T132ML4	6.4
24	60	2745	1.7	R250	T132ML4	17
24	62	2947	2.8	CB250	T132ML4	18
24	62	2910	2.0	CB215	T132ML4	11
24	62	2910	1.1	CB180	T132ML4	9.3
21	69	3073	1.0	R215	T132ML4	10
21	70	2991	1.5	R250	T132ML4	14
21	70	2864	0.7	R180	T132ML4	6.5
20	72	3336	0.7	CB150	T132ML4	6.4
19.5	75	3520	1.7	CB215	T132ML4	11
19.5	75	3475	1.0	CB180	T132ML4	8.9
18.7	78	3661	2.4	CB250	T132ML4	17
18.5	79	3281	1.2	R250	T132ML4	13
18.3	80	3659	1.6	CB215	T132ML4	10
18.3	80	3274	0.9	R215	T132ML4	8.0
17.2	85	3784	0.9	CB180	T132ML4	7.9
17.2	85	3733	0.6	CB150	T132ML4	5.5
16.2	90	4225	2.2	CB250	T132ML4	17
14.9	98	4069	1.0	R250	T132ML4	13
14.6	100	4092	0.7	R215	T132ML4	8.0
13.6	107	4703	0.7	CB180	T132ML4	7.6
13.4	109	5118	1.9	CB250	T132ML4	17
13.0	112	5053	1.3	CB215	T132ML4	10
12.2	120	5342	1.6	CB250	T132ML4	15
12.1	121	5386	1.1	CB215	T132ML4	10
11.8	124	5375	0.7	CB180	T132ML4	7.3
10.7	136	5481	1.1	110/215	T132ML4	6.0
10.4	140	5476	1.6	130/250	T132ML4	9.1
10.4	140	5475	0.7	110/180	T132ML4	6.0
10.4	140	5644	0.7	130/180	T132ML4	9.1
10.1	145	6456	1.4	CB250	T132ML4	15
10.0	146	6414	1.0	CB215	T132ML4	9.3
8.4	174	6597	0.8	CB215	T132ML4	6.8
8.3	177	7668	1.1	CB250	T132ML4	14

1.7 - Motoriduttori

n_2 min^{-1}	ir	T2 Nm	FS'		9.2 kW	Ptn kW
7.5	195	7624	0.9	110/215	T132ML4	5.6
7.3	200	7221	1.4	130/250	T132ML4	8.4
7.1	207	8100	1.0	CB250	T132ML4	11
6.9	213	8209	0.6	CB215	T132ML4	7.0
6.1	240	9249	0.9	CB250	T132ML4	11
5.0	290	10829	0.8	CB250	T132ML4	11
5.0	293	10761	0.7	110/215	T132ML4	5.6
4.9	300	11005	1.0	130/250	T132ML4	8.4
4.1	360	13200	0.7	CB250	T132ML4	10
3.7	400	12758	0.8	130/250	T132ML4	6.4
2.4	600	16631	0.6	130/250	T132ML4	6.8

1.7 - *Gearmotors*

n_2 min^{-1}	ir	T2 Nm	FS'		11.0 kW	Ptn kW
424	7	220.4	4.6	R180	T160MA2	19
424	7	217.9	3.5	R150	T160MA2	12
420	7	222.6	4.6	R180	T132M2	19
420	7	220.1	3.4	R150	T132M2	12
420	7	220.1	2.3	R130	T132M2	9
420	7	215.1	1.6	R110	T132M2	6
297	10	311.3	3.8	R180	T160MA2	17
297	10	307.7	2.8	R150	T160MA2	11
294	10	314.4	3.8	R180	T132M2	17
294	10	310.9	2.7	R150	T132M2	11
294	10	310.9	1.8	R130	T132M2	8
294	10	303.7	1.3	R110	T132M2	6
210	7	450.2	5.3	R215	T160M4	26
210	7	445.2	3.4	R180	T160M4	19
210	7	440.2	2.4	R150	T160M4	12
198	15	466.9	5.1	R215	T160MA2	21
198	15	456.3	2.9	R180	T160MA2	15
198	15	451.0	2.1	R150	T160MA2	10
196	15	471.7	5.1	R215	T132M2	21
196	15	460.9	2.9	R180	T132M2	15
196	15	455.6	2.1	R150	T132M2	10
196	15	450.2	1.4	R130	T132M2	7
196	15	444.9	0.9	R110	T132M2	5
149	20	608.4	5.8	R250	T160MA2	28
149	20	615.4	4.1	R215	T160MA2	20
149	20	594.2	2.6	R180	T160MA2	13
147	20	614.6	5.7	R250	T132M2	28
147	10	636.0	4.8	R215	T160M4	23
147	20	621.7	4.0	R215	T132M2	20
147	10	628.9	2.6	R180	T160M4	17
147	20	600.3	2.5	R180	T132M2	13
147	10	621.7	1.9	R150	T160M4	11
147	20	600.3	1.8	R150	T132M2	9
147	20	593.1	1.2	R130	T132M2	6
137	7	681.7	5.9	R250	T160L6	36
137	7	681.7	4.3	R215	T160L6	23
137	7	674.1	2.7	R180	T160L6	17
137	7	666.4	2.0	R150	T160L6	11
134	11	699.6	6.1	R250	T160M4	36
106	28	851.7	2.8	R215	T160MA2	18
106	28	792.3	1.8	R180	T160MA2	10
105	28	860.4	2.8	R215	T132M2	18
105	28	800.4	1.7	R180	T132M2	10
105	28	770.4	1.3	R150	T132M2	6
105	28	760.4	0.8	R130	T132M2	5
99	30	901.9	4.0	R250	T160MA2	26
98	15	954.0	5.2	R250	T160M4	36
98	30	911.1	4.0	R250	T132M2	26
98	15	943.3	3.5	R215	T160M4	21
98	15	921.9	2.0	R180	T160M4	15
98	15	911.2	1.4	R150	T160M4	10
96	10	963.0	3.8	R215	T160L6	21
96	10	952.0	2.1	R180	T160L6	16
96	10	941.1	1.5	R150	T160L6	11
87	11	1071	4.8	R250	T160L6	36
80	37	1060	2.2	CB180	T160MA2	11
79	37	1071	2.2	CB180	T132M2	11
78	38	1102	5.0	CB250	T160MA2	21
77	38	1113	4.9	CB250	T132M2	21
74	40	1132	3.4	R250	T160MA2	20
74	40	1146	2.1	R215	T160MA2	13
74	40	1146	1.5	CB150	T160MA2	8
74	40	1061	1.4	R180	T160MA2	8
74	40	1132	1.0	CB130	T160MA2	6
74	20	1229	3.9	R250	T160M4	28
74	40	1143	3.3	R250	T132M2	20
74	20	1229	2.7	R215	T160M4	18
74	40	1158	2.1	R215	T132M2	13
74	20	1201	1.7	R180	T160M4	13
74	40	1158	1.5	CB150	T132M2	8
74	40	1072	1.4	R180	T132M2	8
74	40	1086	1.0	R150	T132M2	6
74	40	1143	1.0	CB130	T132M2	6
74	40	1058	0.7	R130	T132M2	4
71	42	1203	3.5	CB215	T160MA2	13
70	42	1216	3.5	CB215	T132M2	13
64	15	1444	4.2	R250	T160L6	33
64	15	1428	2.7	R215	T160L6	20
64	15	1395	1.5	R180	T160L6	14
64	15	1362	1.1	R150	T160L6	9

1.7 - Getriebemotoren

n_2 min^{-1}	ir	T2 Nm	FS'		11.0 kW	Ptn kW
61	49	1352	2.8	R250	T160MA2	18
61	49	1283	1.2	R180	T160MA2	8
60	49	1366	2.8	R250	T132M2	18
60	49	1296	1.2	R180	T132M2	8
60	49	1296	0.8	R150	T132M2	6
59	50	1380	1.7	R215	T160MA2	12
59	50	1415	1.3	CB150	T160MA2	7
59	50	1397	0.9	CB130	T160MA2	5
59	50	1394	1.7	R215	T132M2	12
59	50	1429	1.3	CB150	T132M2	7
59	50	1411	0.8	CB130	T132M2	5
57	52	1490	4.2	CB250	T160MA2	20
57	52	1490	1.8	CB180	T160MA2	11
57	52	1505	4.2	CB250	T132M2	20
57	52	1505	1.8	CB180	T132M2	11
56	53	1518	3.0	CB215	T160MA2	13
55	53	1534	3.0	CB215	T132M2	13
53	56	1466	1.1	R180	T160MA2	8
53	28	1701	1.9	R215	T160M4	17
53	28	1581	1.2	R180	T160M4	10
53	56	1481	1.1	R180	T132M2	8
53	56	1481	0.7	R150	T132M2	6
52	57	1532	1.5	R215	T160MA2	11
52	57	1548	1.5	R215	T132M2	11
51	58	1621	1.1	CB150	T160MA2	7
51	58	1621	0.7	CB130	T160MA2	5
51	58	1637	1.1	CB150	T132M2	7
51	58	1637	0.7	CB130	T132M2	5
50	60	1634	2.2	R250	T160MA2	17
49	30	1801	2.7	R250	T160M4	25
49	60	1651	2.2	R250	T132M2	17
48	20	1860	3.1	R250	T160L6	26
48	20	1860	2.1	R215	T160L6	17
48	20	1816	1.3	R180	T160L6	12
48	62	1776	3.8	CB250	T160MA2	20
48	62	1755	2.7	CB215	T160MA2	13
48	62	1755	1.5	CB180	T160MA2	10
47	62	1794	3.7	CB250	T132M2	20
47	62	1772	2.7	CB215	T132M2	13
47	62	1772	1.5	CB180	T132M2	10
43	69	1855	1.3	R215	T160MA2	11
43	69	1874	1.3	R215	T132M2	11
42	70	1783	1.9	R250	T160MA2	14
42	70	1783	0.8	R180	T160MA2	6
42	70	1801	1.9	R250	T132M2	14
42	70	1801	0.8	R180	T132M2	6
41	72	2012	1.0	CB150	T160MA2	7
41	72	1986	0.6	CB130	T160MA2	5
41	72	2033	1.0	CB150	T132M2	7
41	72	2007	0.6	CB130	T132M2	5
40	37	2115	1.4	CB180	T160M4	10
40	75	2122	2.4	CB215	T160MA2	13
40	75	2096	1.3	CB180	T160MA2	10
39	75	2144	2.4	CB215	T132M2	13
39	75	2117	1.3	CB180	T132M2	10
39	38	2173	3.2	CB250	T160M4	19
38	78	2207	3.3	CB250	T160MA2	19
38	78	2230	3.2	CB250	T132M2	19
38	79	1956	1.5	R250	T160MA2	13
37	79	1976	1.5	R250	T132M2	13
37	80	2236	2.1	CB215	T160MA2	12
37	80	1981	1.1	R215	T160MA2	9
37	40	2258	2.2	R250	T160M4	19
37	80	2258	2.1	CB215	T132M2	12
37	40	2258	1.4	R215	T160M4	12
37	80	2001	1.1	R215	T132M2	9
37	40	2144	0.9	R180	T160M4	8
37	40	2258	0.9	CB150	T160M4	7
37	80	1972	0.7	R180	T132M2	6
37	40	2230	0.6	CB130	T160M4	5
35	42	2371	2.2	CB215	T160M4	12
35	85	2285	1.2	CB180	T160MA2	9
35	85	2285	0.8	CB150	T160MA2	6
35	85	2308	1.2	CB180	T132M2	9
35	85	2308	0.8	CB150	T132M2	6
34	28	2574	1.2	R215	T160L6	16
34	28	2359	0.9	R180	T160L6	9
33	90	2547	3.0	CB250	T160MA2	19
33	90	2572	2.9	CB250	T132M2	19
32	30	2725	2.1	R250	T160L6	23

1.7 - Motoriduttori

n_2 min^{-1}	ir	T2 Nm	FS'		11.0 kW	Ptn kW
30	98	2426	1.2	R250	T160MA2	13
30	49	2696	1.9	R250	T160M4	17
30	98	2451	1.2	R250	T132M2	13
30	49	2591	0.8	R180	T160M4	8
30	100	2476	0.9	R215	T160MA2	9
29	50	2716	1.2	R215	T160M4	11
29	100	2501	0.9	R215	T132M2	9
29	50	2787	0.8	CB150	T160M4	7
28	52	2936	2.7	CB250	T160M4	18
28	52	2936	1.1	CB180	T160M4	10
28	107	2838	1.0	CB180	T160MA2	8
28	53	2992	1.9	CB215	T160M4	12
27	107	2867	1.0	CB180	T132M2	8
27	109	3046	2.6	CB250	T160MA2	18
27	109	3077	2.6	CB250	T132M2	18
27	112	3090	1.7	CB215	T160MA2	11
26	112	3121	1.7	CB215	T132M2	11
26	56	2922	0.7	R180	T160M4	8
26	37	3158	1.1	CB180	T160L6	9
26	115	3050	0.7	CB150	T160MA2	6
26	57	3014	1.0	R215	T160M4	10
26	115	3081	0.7	CB150	T132M2	6
25	58	3192	0.7	CB150	T160M4	6
25	38	3285	2.4	CB250	T160L6	18
25	120	3226	2.2	CB250	T160MA2	16
25	121	3252	1.5	CB215	T160MA2	10
25	120	3259	2.2	CB250	T132M2	16
25	60	3259	1.4	R250	T160M4	17
24	121	3286	1.5	CB215	T132M2	10
24	40	3370	1.7	R250	T160L6	17
24	40	3370	1.1	R215	T160L6	11
24	40	3195	0.7	R180	T160L6	8
24	40	3414	0.7	CB150	T160L6	7
24	124	3290	0.9	CB180	T160MA2	8
24	62	3500	2.4	CB250	T160M4	18
24	62	3456	1.7	CB215	T160M4	11
24	62	3456	0.9	CB180	T160M4	9
24	124	3323	0.9	CB180	T132M2	8
23	42	3584	1.7	CB215	T160L6	11
21	69	3650	0.8	R215	T160M4	10
21	70	3552	1.2	R250	T160M4	14
20	145	3898	1.9	CB250	T160MA2	16
20	146	3925	1.3	CB215	T160MA2	10
20	145	3937	1.9	CB250	T132M2	16
20	146	3964	1.3	CB215	T132M2	10
20	150	3926	0.8	CB180	T160MA2	8
20	75	4181	1.5	CB215	T160M4	11
20	75	4127	0.8	CB180	T160M4	9
20	150	3966	0.8	CB180	T132M2	8
20	49	4022	1.4	R250	T160L6	16
20	49	3861	0.6	R180	T160L6	7
19.2	50	4049	0.9	R215	T160L6	10
18.9	78	4347	2.0	CB250	T160M4	17
18.6	79	3895	1.0	R250	T160M4	13
18.5	52	4439	2.0	CB250	T160L6	17
18.5	52	4439	0.8	CB180	T160L6	9
18.4	80	4344	1.3	CB215	T160M4	10
18.4	80	3886	0.7	R215	T160M4	8
18.1	53	4467	1.4	CB215	T160L6	11
17.3	85	4496	0.7	CB180	T160M4	8
17.1	174	3877	1.2	CB215	T160MA2	7
17.1	174	4185	0.7	CB180	T160MA2	6
16.9	174	3916	1.2	CB215	T132M2	7
16.9	174	4227	0.7	CB180	T132M2	6
16.8	57	4429	0.8	R215	T160L6	9
16.8	177	4633	1.5	CB250	T160MA2	15
16.6	177	4680	1.5	CB250	T132M2	15
16.3	90	5018	1.8	CB250	T160M4	17
16.0	60	4859	1.1	R250	T160L6	15
15.5	62	5293	1.8	CB250	T160L6	17
15.5	62	5225	1.3	CB215	T160L6	11
15.5	62	5225	0.7	CB180	T160L6	9
15.0	98	4832	0.8	R250	T160M4	13
14.4	207	4978	1.4	CB250	T160MA2	12
14.2	207	5031	1.4	CB250	T132M2	12
13.9	213	5125	0.8	CB215	T160MA2	8
13.9	69	5362	0.7	R215	T160L6	9
13.8	213	5176	0.8	CB215	T132M2	8
13.7	107	5581	0.6	CB180	T160M4	8
13.7	70	5210	1.0	R250	T160L6	12

1.7 - *Gearmotors*

n_2 min^{-1}	ir	T2 Nm	FS'		11.0 kW	Ptn kW
13.5	109	6074	1.6	CB250	T160M4	17
13.1	112	6005	1.1	CB215	T160M4	10
12.8	75	6238	1.1	CB215	T160L6	10
12.4	240	5685	1.3	CB250	T160MA2	11
12.3	78	6571	1.5	CB250	T160L6	16
12.3	120	6346	1.4	CB250	T160M4	15
12.3	240	5746	1.2	CB250	T132M2	11
12.2	121	6398	0.9	CB215	T160M4	10
12.2	79	5793	0.8	R250	T160L6	12
12.0	80	6566	1.0	CB215	T160L6	10
12.0	248	5875	0.8	CB215	T160MA2	8
11.9	248	5940	0.8	CB215	T132M2	8
11.1	267	6140	0.7	CB215	T160MA2	7
11.0	267	6202	0.7	CB215	T132M2	7
10.7	90	7581	1.3	CB250	T160L6	16
10.2	290	6668	1.1	CB250	T160MA2	11
10.1	145	7666	1.2	CB250	T160M4	15
10.1	290	6734	1.1	CB250	T132M2	11
10.1	146	7615	0.8	CB215	T160M4	9
9.9	300	7003	0.7	CB215	T160MA2	7
9.8	300	7075	0.7	CB215	T132M2	7
9.8	98	7182	0.6	R250	T160L6	12
8.8	109	9181	1.1	CB250	T160L6	16
8.6	112	9071	0.8	CB215	T160L6	10
8.5	174	7832	0.7	CB215	T160M4	7
8.3	177	9102	0.9	CB250	T160M4	14
8.3	360	8150	0.9	CB250	T160MA2	11
8.2	360	8230	0.9	CB250	T132M2	11
8.0	120	9586	1.0	CB250	T160L6	14
7.9	121	9537	0.7	CB215	T160L6	9
7.1	207	9617	0.9	CB250	T160M4	11
6.8	435	9690	0.7	CB250	T160MA2	10
6.8	435	9791	0.7	CB250	T132M2	10
6.6	145	11425	0.9	CB250	T160L6	14
6.6	146	11335	0.6	CB215	T160L6	9
6.1	240	10986	0.8	CB250	T160M4	11
5.4	177	13568	0.7	CB250	T160L6	13
5.1	290	12847	0.7	CB250	T160M4	11
4.6	207	14264	0.6	CB250	T160L6	10

1.7 - Getriebemotoren

n_2 min^{-1}	ir	T2 Nm	FS'		15.0 kW	Ptn kW
423	7	304.9	5.4	R215	T160MB2	26
423	7	301.5	3.4	R180	T160MB2	19
423	7	298.1	2.5	R150	T160MB2	12
420	7	307.0	5.4	R215	T132ML2	26
420	7	303.6	3.3	R180	T132ML2	19
420	7	300.1	2.5	R150	T132ML2	12
420	7	300.1	1.7	R130	T132ML2	9
420	7	293.3	1.2	R110	T132ML2	6
296	10	430.7	5.0	R215	T160MB2	23
296	10	425.9	2.8	R180	T160MB2	17
296	10	421.0	2.0	R150	T160MB2	11
294	10	433.6	5.0	R215	T132ML2	23
294	10	428.8	2.8	R180	T132ML2	17
294	10	423.9	2.0	R150	T132ML2	11
294	10	423.9	1.4	R130	T132ML2	8
294	10	414.2	0.9	R110	T132ML2	6
269	11	473.8	6.4	R250	T160MB2	36
267	11	477.0	6.4	R250	T132ML2	36
211	7	609.8	5.2	R250	T160L4	40
211	7	609.8	3.9	R215	T160L4	26
211	7	603.0	2.5	R180	T160L4	19
211	7	596.2	1.8	R150	T160L4	12
197	15	646.1	5.6	R250	T160MB2	36
197	15	638.8	3.8	R215	T160MB2	21
197	15	624.3	2.1	R180	T160MB2	15
197	15	617.1	1.5	R150	T160MB2	10
196	15	650.5	5.5	R250	T132ML2	36
196	15	643.2	3.7	R215	T132ML2	21
196	15	628.5	2.1	R180	T132ML2	15
196	15	621.2	1.5	R150	T132ML2	10
196	15	613.9	1.0	R130	T132ML2	7
196	15	606.6	0.7	R110	T132ML2	5
148	20	832.4	4.2	R250	T160MB2	28
148	10	861.4	3.5	R215	T160L4	23
148	20	842.1	3.0	R215	T160MB2	20
148	10	851.7	1.9	R180	T160L4	17
148	20	813.0	1.9	R180	T160MB2	13
148	10	842.1	1.4	R150	T160L4	11
147	20	838.1	4.2	R250	T132ML2	28
147	20	847.8	2.9	R215	T132ML2	20
147	20	818.6	1.9	R180	T132ML2	13
147	20	818.6	1.3	R150	T132ML2	9
147	20	808.8	0.8	R130	T132ML2	6
139	7	920.1	4.3	R250	T180L6	36
139	7	920.1	3.2	R215	T180L6	23
139	7	909.7	2.0	R180	T180L6	17
135	11	947.5	4.5	R250	T160L4	36
106	28	1165	2.1	R215	T160MB2	18
106	28	1084	1.3	R180	T160MB2	10
105	28	1173	2.0	R215	T132ML2	18
105	28	1091	1.3	R180	T132ML2	10
105	28	1051	0.9	R150	T132ML2	6
99	15	1292	3.9	R250	T160L4	36
99	30	1234	2.9	R250	T160MB2	26
99	15	1278	2.6	R215	T160L4	21
99	15	1249	1.4	R180	T160L4	15
99	15	1234	1.0	R150	T160L4	10
98	30	1243	2.9	R250	T132ML2	26
97	10	1300	2.8	R215	T180L6	21
97	10	1285	1.5	R180	T180L6	16
88	11	1446	3.6	R250	T180L6	36
80	37	1450	1.6	CB180	T160MB2	11
79	37	1460	1.6	CB180	T132ML2	11
78	38	1508	3.7	CB250	T160MB2	21
77	38	1518	3.6	CB250	T132ML2	21
74	20	1665	2.9	R250	T160L4	28
74	40	1549	2.5	R250	T160MB2	20
74	20	1665	2.0	R215	T160L4	18
74	40	1568	1.5	R215	T160MB2	13
74	20	1626	1.3	R180	T160L4	13
74	40	1568	1.1	CB150	T160MB2	8
74	40	1452	1.1	R180	T160MB2	8
74	40	1549	0.7	CB130	T160MB2	6
74	40	1559	2.4	R250	T132ML2	20
74	40	1579	1.5	R215	T132ML2	13
74	40	1579	1.1	CB150	T132ML2	8
74	40	1462	1.0	R180	T132ML2	8
74	40	1481	0.7	R150	T132ML2	6
74	40	1559	0.7	CB130	T132ML2	6
70	42	1646	2.6	CB215	T160MB2	13

1.7 - Motoriduttori

n_2 min^{-1}	ir	T2 Nm	FS'		15.0 kW	Ptn kW
70	42	1658	2.5	CB215	T132ML2	13
65	15	1949	3.1	R250	T180L6	33
65	15	1927	2.0	R215	T180L6	20
65	15	1883	1.1	R180	T180L6	14
60	49	1850	2.1	R250	T160MB2	18
60	49	1755	0.9	R180	T160MB2	8
60	49	1862	2.0	R250	T132ML2	18
60	49	1767	0.9	R180	T132ML2	8
59	50	1887	1.3	R215	T160MB2	12
59	50	1936	0.9	CB150	T160MB2	7
59	50	1912	0.6	CB130	T160MB2	5
59	50	1900	1.3	R215	T132ML2	12
59	50	1949	0.9	CB150	T132ML2	7
59	50	1925	0.6	CB130	T132ML2	5
57	52	2039	3.1	CB250	T160MB2	20
57	52	2039	1.3	CB180	T160MB2	11
57	52	2052	3.1	CB250	T132ML2	20
57	52	2052	1.3	CB180	T132ML2	11
56	53	2078	2.2	CB215	T160MB2	13
55	53	2092	2.2	CB215	T132ML2	13
53	28	2304	1.4	R215	T160L4	17
53	28	2141	0.9	R180	T160L4	10
53	56	2005	0.8	R180	T160MB2	8
53	56	2019	0.8	R180	T132ML2	8
52	57	2097	1.1	R215	T160MB2	11
52	57	2111	1.1	R215	T132ML2	11
51	58	2218	0.8	CB150	T160MB2	7
51	58	2233	0.8	CB150	T132ML2	7
49	30	2439	2.0	R250	T160L4	25
49	60	2236	1.6	R250	T160MB2	17
49	60	2251	1.6	R250	T132ML2	17
49	20	2511	2.3	R250	T180L6	26
49	20	2511	1.6	R215	T180L6	17
48	62	2431	2.8	CB250	T160MB2	20
48	62	2401	2.0	CB215	T160MB2	13
48	62	2401	1.1	CB180	T160MB2	10
47	62	2447	2.7	CB250	T132ML2	20
47	62	2417	2.0	CB215	T132ML2	13
47	62	2417	1.1	CB180	T132ML2	10
43	69	2538	0.9	R215	T160MB2	11
43	69	2555	0.9	R215	T132ML2	11
42	70	2439	1.4	R250	T160MB2	14
42	70	2439	0.6	R180	T160MB2	6
42	70	2456	1.4	R250	T132ML2	14
42	70	2456	0.6	R180	T132ML2	6
41	72	2753	0.7	CB150	T160MB2	7
41	72	2772	0.7	CB150	T132ML2	7
40	37	2865	1.0	CB180	T160L4	10
39	75	2904	1.8	CB215	T160MB2	13
39	75	2867	1.0	CB180	T160MB2	10
39	75	2924	1.7	CB215	T132ML2	13
39	75	2887	1.0	CB180	T132ML2	10
39	38	2942	2.4	CB250	T160L4	19
38	78	3020	2.4	CB250	T160MB2	19
38	78	3041	2.4	CB250	T132ML2	19
37	79	2676	1.1	R250	T160MB2	13
37	79	2694	1.1	R250	T132ML2	13
37	40	3059	1.6	R250	T160L4	19
37	80	3059	1.6	CB215	T160MB2	12
37	40	3059	1.0	R215	T160L4	12
37	80	2710	0.8	R215	T160MB2	9
37	40	2904	0.7	R180	T160L4	8
37	40	3059	0.7	CB150	T160L4	7
37	80	3079	1.6	CB215	T132ML2	12
37	80	2729	0.8	R215	T132ML2	9
35	42	3211	1.6	CB215	T160L4	12
35	85	3127	0.9	CB180	T160MB2	9
35	85	3127	0.6	CB150	T160MB2	6
35	28	3474	0.9	R215	T180L6	16
35	85	3147	0.9	CB180	T132ML2	9
35	85	3147	0.6	CB150	T132ML2	6
33	90	3484	2.2	CB250	T160MB2	19
33	90	3508	2.2	CB250	T132ML2	19
32	30	3678	1.6	R250	T180L6	23
30	49	3653	1.4	R250	T160L4	17
30	98	3320	0.9	R250	T160MB2	13
30	98	3343	0.9	R250	T132ML2	13
30	50	3678	0.9	R215	T160L4	11
30	100	3388	0.6	R215	T160MB2	9
29	100	3411	0.6	R215	T132ML2	9

1.7 - *Gearmotors*

n_2 min^{-1}	ir	T2 Nm	FS'		15.0 kW	Ptn kW
28	52	3976	2.0	CB250	T160L4	18
28	52	3976	0.8	CB180	T160L4	10
28	53	4053	1.4	CB215	T160L4	12
28	107	3884	0.7	CB180	T160MB2	8
27	107	3910	0.7	CB180	T132ML2	8
27	109	4167	1.9	CB250	T160MB2	18
27	109	4196	1.9	CB250	T132ML2	18
26	112	4228	1.3	CB215	T160MB2	11
26	112	4257	1.2	CB215	T132ML2	11
26	37	4262	0.8	CB180	T180L6	9
26	57	4083	0.7	R215	T160L4	10
26	38	4433	1.8	CB250	T180L6	18
25	120	4413	1.6	CB250	T160MB2	16
25	60	4413	1.1	R250	T160L4	17
25	120	4444	1.6	CB250	T132ML2	16
24	121	4451	1.1	CB215	T160MB2	10
24	121	4480	1.1	CB215	T132ML2	10
24	40	4549	1.3	R250	T180L6	17
24	40	4549	0.8	R215	T180L6	11
24	62	4741	1.8	CB250	T160L4	18
24	62	4681	1.3	CB215	T160L4	11
24	62	4681	0.7	CB180	T160L4	9
24	124	4501	0.7	CB180	T160MB2	8
24	124	4531	0.7	CB180	T132ML2	8
23	42	4837	1.2	CB215	T180L6	11
21	69	4942	0.6	R215	T160L4	10
21	70	4811	0.9	R250	T160L4	14
20	145	5334	1.4	CB250	T160MB2	16
20	145	5369	1.4	CB250	T132ML2	16
20	146	5371	1.0	CB215	T160MB2	10
20	146	5406	1.0	CB215	T132ML2	10
20	49	5426	1.1	R250	T180L6	16
20	75	5663	1.1	CB215	T160L4	11
19.4	50	5464	0.7	R215	T180L6	10
19.0	78	5890	1.5	CB250	T160L4	17
18.7	79	5277	0.7	R250	T160L4	13
18.7	52	5991	1.5	CB250	T180L6	17
18.7	52	5991	0.6	CB180	T180L6	9
18.5	80	5885	1.0	CB215	T160L4	10
18.3	53	6028	1.0	CB215	T180L6	11
17.0	174	5306	0.9	CB215	T160MB2	7
16.9	174	5340	0.9	CB215	T132ML2	7
16.7	177	6340	1.1	CB250	T160MB2	15
16.6	177	6382	1.1	CB250	T132ML2	15
16.4	90	6797	1.3	CB250	T160L4	17
16.2	60	6555	0.8	R250	T180L6	15
15.7	62	7140	1.3	CB250	T180L6	17
15.7	62	7048	0.9	CB215	T180L6	11
14.3	207	6812	1.0	CB250	T160MB2	12
14.2	207	6860	1.0	CB250	T132ML2	12
13.9	213	7008	0.6	CB215	T160MB2	8
13.9	70	7028	0.7	R250	T180L6	12
13.8	213	7059	0.6	CB215	T132ML2	8
13.6	109	8228	1.2	CB250	T160L4	17
13.2	112	8133	0.8	CB215	T160L4	10
12.9	75	8420	0.8	CB215	T180L6	10
12.4	78	8867	1.1	CB250	T180L6	16
12.3	120	8597	1.0	CB250	T160L4	15
12.3	240	7784	0.9	CB250	T160MB2	11
12.3	240	7835	0.9	CB250	T132ML2	11
12.2	121	8668	0.7	CB215	T160L4	10
12.1	80	8864	0.7	CB215	T180L6	10
10.8	90	10232	1.0	CB250	T180L6	16
10.2	145	10382	0.9	CB250	T160L4	15
10.2	290	9120	0.8	CB250	T160MB2	11
10.1	290	9182	0.8	CB250	T132ML2	11
10.1	146	10313	0.6	CB215	T160L4	9
8.9	109	12394	0.8	CB250	T180L6	16
8.4	177	12337	0.7	CB250	T160L4	14
8.2	360	11154	0.7	CB250	T160MB2	11
8.2	360	11222	0.7	CB250	T132ML2	11
8.1	120	12943	0.7	CB250	T180L6	14
7.2	207	13023	0.6	CB250	T160L4	11
6.7	145	15417	0.7	CB250	T180L6	14

1.7 - Getriebemotoren

n_2 min^{-1}	ir	T2 Nm	FS'		18.5 kW	Ptn kW
423	7	376.0	5.9	R250	T160L2	40
423	7	376.0	4.4	R215	T160L2	26
423	7	371.9	2.7	R180	T160L2	19
423	7	367.7	2.1	R150	T160L2	12
296	10	531.2	4.1	R215	T160L2	23
296	10	525.3	2.3	R180	T160L2	17
296	10	519.3	1.6	R150	T160L2	11
269	11	584.3	5.2	R250	T160L2	36
210	7	757.2	4.2	R250	T180M4	40
210	7	757.2	3.2	R215	T180M4	26
210	7	748.8	2.0	R180	T180M4	19
197	15	796.8	4.5	R250	T160L2	36
197	15	787.9	3.0	R215	T160L2	21
197	15	770.0	1.7	R180	T160L2	15
197	15	761.0	1.2	R150	T160L2	10
148	20	1027	3.4	R250	T160L2	28
148	20	1039	2.4	R215	T160L2	20
148	20	1003	1.5	R180	T160L2	13
147	10	1070	2.8	R215	T180M4	23
147	10	1058	1.6	R180	T180M4	17
139	7	1129	3.5	R250	T200LA6	36
139	7	1129	2.6	R215	T200LA6	23
134	11	1177	3.6	R250	T180M4	36
106	28	1437	1.7	R215	T160L2	18
106	28	1337	1.0	R180	T160L2	10
99	30	1522	2.4	R250	T160L2	26
98	15	1605	3.1	R250	T180M4	36
98	15	1587	2.1	R215	T180M4	21
98	15	1550	1.2	R180	T180M4	15
98	10	1595	2.3	R215	T200LA6	21
89	11	1774	2.9	R250	T200LA6	36
80	37	1789	1.3	CB180	T160L2	11
78	38	1860	3.0	CB250	T160L2	21
74	40	1910	2.0	R250	T160L2	20
74	40	1934	1.2	R215	T160L2	13
74	40	1934	0.9	CB150	T160L2	8
74	40	1791	0.9	R180	T160L2	8
74	20	2067	2.3	R250	T180M4	28
74	20	2067	1.6	R215	T180M4	18
70	42	2030	2.1	CB215	T160L2	13
65	15	2392	2.5	R250	T200LA6	33
65	15	2365	1.6	R215	T200LA6	20
60	49	2281	1.7	R250	T160L2	18
60	49	2164	0.7	R180	T160L2	8
59	50	2328	1.0	R215	T160L2	12
59	50	2388	0.8	CB150	T160L2	7
57	52	2514	2.5	CB250	T160L2	20
57	52	2514	1.1	CB180	T160L2	11
56	53	2562	1.8	CB215	T160L2	13
53	56	2473	0.7	R180	T160L2	8
53	28	2861	1.1	R215	T180M4	17
52	57	2586	0.9	R215	T160L2	11
51	58	2735	0.7	CB150	T160L2	7
49	60	2758	1.3	R250	T160L2	17
49	30	3029	1.6	R250	T180M4	25
48	62	2998	2.2	CB250	T160L2	20
48	62	2961	1.6	CB215	T160L2	13
48	62	2961	0.9	CB180	T160L2	10
43	69	3130	0.8	R215	T160L2	11
42	70	3008	1.1	R250	T160L2	14
40	37	3558	0.8	CB180	T180M4	10
39	75	3581	1.4	CB215	T160L2	13
39	75	3536	0.8	CB180	T160L2	10
39	38	3654	1.9	CB250	T180M4	19
38	78	3724	1.9	CB250	T160L2	19
37	79	3301	0.9	R250	T160L2	13
37	80	3772	1.3	CB215	T160L2	12
37	80	3342	0.7	R215	T160L2	9
37	40	3798	1.3	R250	T180M4	19
37	40	3798	0.8	R215	T180M4	12
35	42	3988	1.3	CB215	T180M4	12
35	85	3856	0.7	CB180	T160L2	9
33	90	4297	1.8	CB250	T160L2	19
30	98	4095	0.7	R250	T160L2	13
30	49	4535	1.1	R250	T180M4	17
29	50	4567	0.7	R215	T180M4	11
28	52	4937	1.6	CB250	T180M4	18
28	52	4937	0.7	CB180	T180M4	10
28	53	5032	1.1	CB215	T180M4	12
28	107	4791	0.6	CB180	T160L2	8

1.7 - Motoriduttori

n_2 min^{-1}	ir	T2 Nm	FS'		18.5 kW	Ptn kW
27	109	5139	1.6	CB250	T160L2	18
26	112	5214	1.0	CB215	T160L2	11
26	37	5230	0.6	CB180	T200LA6	9
26	38	5439	1.5	CB250	T200LA6	18
25	120	5443	1.3	CB250	T160L2	16
25	60	5481	0.9	R250	T180M4	17
24	121	5490	0.9	CB215	T160L2	10
24	62	5887	1.4	CB250	T180M4	18
24	62	5812	1.0	CB215	T180M4	11
23	42	5937	1.0	CB215	T200LA6	11
21	70	5973	0.7	R250	T180M4	14
20	145	6579	1.2	CB250	T160L2	16
20	146	6624	0.8	CB215	T160L2	10
20	75	7031	0.9	CB215	T180M4	11
18.9	78	7311	1.2	CB250	T180M4	17
18.8	52	7350	1.2	CB250	T200LA6	17
18.4	53	7393	0.9	CB215	T200LA6	11
18.4	80	7305	0.8	CB215	T180M4	10
17.0	174	6543	0.7	CB215	T160L2	7
16.7	177	7820	0.9	CB250	T160L2	15
16.3	90	8439	1.1	CB250	T180M4	17
15.7	62	8761	1.1	CB250	T200LA6	17
15.7	62	8648	0.8	CB215	T200LA6	11
14.3	207	8401	0.8	CB250	T160L2	12
13.5	109	10216	0.9	CB250	T180M4	17
13.1	112	10100	0.6	CB215	T180M4	10
13.0	75	10329	0.7	CB215	T200LA6	10
12.5	78	10883	0.9	CB250	T200LA6	16
12.3	240	9600	0.7	CB250	T160L2	11
12.3	120	10673	0.8	CB250	T180M4	15
10.8	90	12561	0.8	CB250	T200LA6	16
10.2	290	11248	0.6	CB250	T160L2	11
10.1	145	12893	0.7	CB250	T180M4	15
8.9	109	15217	0.7	CB250	T200LA6	16
8.1	120	15883	0.6	CB250	T200LA6	14

1.7 - *Gearmotors*

n_2 min^{-1}	ir	T2 Nm	FS'		22.0 kW	Ptn kW
420	7	450.2	4.9	R250	T180M2	40
420	7	450.2	3.7	R215	T180M2	26
420	7	445.2	2.3	R180	T180M2	19
294	10	636.0	3.4	R215	T180M2	23
294	10	628.9	1.9	R180	T180M2	17
267	11	699.6	4.4	R250	T180M2	36
211	7	894.3	3.6	R250	T180L4	26
211	7	894.3	2.7	R215	T180L4	19
211	7	884.4	1.7	R180	T180L4	40
196	15	954.0	3.8	R250	T180M2	36
196	15	943.3	2.5	R215	T180M2	15
196	15	921.9	1.4	R180	T180M2	21
148	10	1263	2.4	R215	T180L4	23
148	10	1249	1.3	R180	T180L4	17
147	20	1229	2.8	R250	T180M2	28
147	20	1243	2.0	R215	T180M2	20
139	7	1342	3.0	R250	T200LB6	23
139	7	1343	2.2	R215	T200LB6	36
135	11	1390	3.1	R250	T180L4	36
105	28	1721	1.4	R215	T180M2	18
99	15	1895	2.6	R250	T180L4	36
99	15	1874	1.8	R215	T180L4	15
99	15	1831	1.0	R180	T180L4	21
98	30	1822	2.0	R250	T180M2	26
98	10	1896	1.9	R215	T200LB6	21
89	11	2110	2.4	R250	T200LB6	36
79	37	2142	1.1	CB180	T180M2	11
77	38	2227	2.5	CB250	T180M2	21
74	20	2442	2.0	R250	T180L4	18
74	20	2442	1.4	R215	T180L4	28
74	40	2287	1.7	R250	T180M2	8
74	40	2315	1.0	R215	T180M2	20
74	40	2315	0.7	CB150	T180M2	13
70	42	2431	1.7	CB215	T180M2	13
65	15	2845	2.1	R250	T200LB6	20
65	15	2812	1.4	R215	T200LB6	33
60	49	2731	1.4	R250	T180M2	18
59	50	2787	0.9	R215	T180M2	7
59	50	2859	0.6	CB150	T180M2	12
57	52	3010	2.1	CB250	T180M2	20
57	52	3010	0.9	CB180	T180M2	11
55	53	3068	1.5	CB215	T180M2	13
53	28	3378	0.9	R215	T180L4	17
52	57	3096	0.7	R215	T180M2	11
49	30	3578	1.3	R250	T180L4	25
49	60	3302	1.1	R250	T180M2	17
47	62	3589	1.9	CB250	T180M2	13
47	62	3545	1.4	CB215	T180M2	20
47	62	3545	0.7	CB180	T180M2	10
43	69	3747	0.6	R215	T180M2	11
42	70	3602	0.9	R250	T180M2	14
40	37	4202	0.7	CB180	T180L4	10
39	75	4288	1.2	CB215	T180M2	13
39	75	4234	0.7	CB180	T180M2	10
39	38	4315	1.6	CB250	T180L4	19
38	78	4460	1.6	CB250	T180M2	19
37	79	3951	0.8	R250	T180M2	13
37	40	4486	1.1	R250	T180L4	19
37	40	4486	0.7	R215	T180L4	12
37	80	4516	1.1	CB215	T180M2	12
35	42	4710	1.1	CB215	T180L4	12
33	90	5145	1.5	CB250	T180M2	19
30	49	5357	0.9	R250	T180L4	17
30	98	4902	0.6	R250	T180M2	13
28	52	5832	1.4	CB250	T180L4	18
28	53	5945	0.9	CB215	T180L4	12
27	109	6154	1.3	CB250	T180M2	18
26	112	6243	0.8	CB215	T180M2	11
26	38	6468	1.2	CB250	T200LB6	18
25	60	6473	0.7	R250	T180L4	17
25	120	6518	1.1	CB250	T180M2	16
24	121	6571	0.8	CB215	T180M2	10
24	62	6953	1.2	CB250	T180L4	11
24	62	6865	0.9	CB215	T180L4	18
23	42	7061	0.8	CB215	T200LB6	11
21	70	7056	0.6	R250	T180L4	14
20	145	7874	1.0	CB250	T180M2	16
20	146	7928	0.7	CB215	T180M2	10
20	75	8306	0.7	CB215	T180L4	11
19.0	78	8639	1.0	CB250	T180L4	17

1.7 - Getriebemotoren

n_2 min^{-1}	ir	T2 Nm	FS'		22.0 kW	Ptn kW
18.8	52	8740	1.0	CB250	T200LB6	17
18.5	80	8631	0.7	CB215	T180L4	10
18.4	53	8792	0.7	CB215	T200LB6	11
16.6	177	9361	0.8	CB250	T180M2	15
16.4	90	9969	0.9	CB250	T180L4	17
15.7	62	10418	0.9	CB250	T200LB6	17
15.7	62	10285	0.6	CB215	T200LB6	11
14.2	207	10061	0.7	CB250	T180M2	12
13.6	109	12068	0.8	CB250	T180L4	17
12.5	78	12942	0.8	CB250	T200LB6	16
12.3	120	12609	0.7	CB250	T180L4	15
12.3	240	11491	0.6	CB250	T180M2	11
10.8	90	14938	0.7	CB250	T200LB6	16

1.7 - Motoriduttori

n_2 min^{-1}	ir	T2 Nm	FS'		30.0 kW	Ptn kW
421	7	612.9	3.6	R250	T200LA2	40
421	7	612.9	2.7	R215	T200LA2	26
295	10	865.8	2.5	R215	T200LA2	23
268	11	952.4	3.2	R250	T200LA2	36
209	7	1236	2.6	R250	T200L4	40
209	7	1236	1.9	R215	T200L4	26
196	15	1299	2.8	R250	T200LA2	36
196	15	1284	1.9	R215	T200LA2	21
146	10	1747	1.7	R215	T200L4	23
133	11	1921	2.2	R250	T200L4	36
97	15	2620	1.9	R250	T200L4	36
97	15	2590	1.3	R215	T200L4	21
80	37	2916	0.8	CB180	T200LA2	11
78	38	3031	1.8	CB250	T200LA2	21
70	42	3310	1.3	CB215	T200LA2	13
57	52	4098	1.5	CB250	T200LA2	20
57	52	4098	0.6	CB180	T200LA2	11
56	53	4176	1.1	CB215	T200LA2	13
48	62	4886	1.4	CB250	T200LA2	20
48	62	4825	1.0	CB215	T200LA2	13
39	75	5837	0.9	CB215	T200LA2	13
38	38	5966	1.2	CB250	T200L4	19
38	78	6070	1.2	CB250	T200LA2	19
37	80	6149	0.8	CB215	T200LA2	12
35	42	6511	0.8	CB215	T200L4	12
33	90	7005	1.1	CB250	T200LA2	19
28	52	8060	1.0	CB250	T200L4	18
28	53	8216	0.7	CB215	T200L4	12
27	109	8377	1.0	CB250	T200LA2	18
26	112	8500	0.6	CB215	T200LA2	11
25	120	8873	0.8	CB250	T200LA2	16
24	62	9611	0.9	CB250	T200L4	18
24	62	9489	0.6	CB215	T200L4	11
20	145	10721	0.7	CB250	T200LA2	16
18.7	78	11938	0.7	CB250	T200L4	17
16.2	90	13777	0.7	CB250	T200L4	17

1.7 - *Gearmotors*

n_2 min^{-1}	ir	T2 Nm	FS'		37.0 kW	Ptn kW
421	7	754.6	2.9	R250	VL2200L22	40
421	7	754.6	2.2	R215	VL2200L22	26
420	7	757.2	2.9	R250	T200LB2	40
420	7	757.2	2.2	R215	T200LB2	26
295	10	1066	2.0	R215	VL2200L22	23
294	10	1070	2.0	R215	T200LB2	23
268	11	1173	2.6	R250	VL2200L22	36
267	11	1177	2.6	R250	T200LB2	36
211	7	1509	2.1	R250	VL2225S4	40
211	7	1509	1.6	R215	VL2225S4	26
197	15	1599	2.3	R250	VL2200L22	36
197	15	1581	1.5	R215	VL2200L22	21
196	15	1605	2.2	R250	T200LB2	36
196	15	1587	1.5	R215	T200LB2	21
148	10	2132	1.4	R215	VL2225S4	23
134	11	2345	1.8	R250	VL2225S4	36
98	15	3198	1.6	R250	VL2225S4	36
98	15	3162	1.0	R215	VL2225S4	21
80	37	3590	0.7	CB180	VL2200L22	11
79	37	3602	0.7	CB180	T200LB2	11
78	38	3732	1.5	CB250	VL2200L22	21
77	38	3745	1.5	CB250	T200LB2	21
70	42	4075	1.0	CB215	VL2200L22	13
70	42	4089	1.0	CB215	T200LB2	13
57	52	5045	1.3	CB250	VL2200L22	20
57	52	5062	1.3	CB250	T200LB2	20
56	53	5142	0.9	CB215	VL2200L22	13
55	53	5160	0.9	CB215	T200LB2	13
48	62	6015	1.1	CB250	VL2200L22	20
48	62	5941	0.8	CB215	VL2200L22	13
47	62	6036	1.1	CB250	T200LB2	20
47	62	5961	0.8	CB215	T200LB2	13
39	75	7187	0.7	CB215	VL2200L22	13
39	75	7211	0.7	CB215	T200LB2	13
39	38	7282	1.0	CB250	VL2225S4	19
38	78	7474	1.0	CB250	VL2200L22	19
38	78	7500	1.0	CB250	T200LB2	19
37	80	7569	0.6	CB215	VL2200L22	12
37	80	7596	0.6	CB215	T200LB2	12
35	42	7948	0.7	CB215	VL2225S4	12
33	90	8624	0.9	CB250	VL2200L22	19
33	90	8653	0.9	CB250	T200LB2	19
28	52	9839	0.8	CB250	VL2225S4	18
27	109	10316	0.8	CB250	VL2200L22	18
27	109	10350	0.8	CB250	T200LB2	18
26	38	10824	0.7	CB250	VL2250M6	18
25	120	10925	0.7	CB250	VL2200L22	16
25	120	10961	0.7	CB250	T200LB2	16
24	62	11734	0.7	CB250	VL2225S4	18
18.9	78	14575	0.6	CB250	VL2225S4	17
18.9	52	14621	0.6	CB250	VL2250M6	17

1.7 - Getriebemotoren

n_2 min^{-1}	ir	T2 Nm	FS'		45.0 kW	Ptn kW
423	7	915	2.4	R250	VL2225M2	40
423	7	915	1.8	R215	VL2225M2	26
296	10	1292	1.7	R215	VL2225M2	23
269	11	1421	2.1	R250	VL2225M2	36
211	7	1836	1.7	R250	VL2225M4	40
211	7	1836	1.3	R215	VL2225M4	26
197	15	1938	1.9	R250	VL2225M2	36
197	15	1917	1.3	R215	VL2225M2	21
148	10	2593	1.2	R215	VL2225M4	23
134	11	2852	1.5	R250	VL2225M4	36
98	15	3890	1.3	R250	VL2225M4	36
98	15	3846	0.9	R215	VL2225M4	21
78	38	4524	1.2	CB250	VL2225M2	21
70	42	4939	0.9	CB215	VL2225M2	13
57	52	6116	1.0	CB250	VL2225M2	20
56	53	6233	0.7	CB215	VL2225M2	13
48	62	7292	0.9	CB250	VL2225M2	20
48	62	7201	0.7	CB215	VL2225M2	13
39	38	8856	0.8	CB250	VL2225M4	19
38	78	9059	0.8	CB250	VL2225M2	19
33	90	10453	0.7	CB250	VL2225M2	19
28	52	11967	0.7	CB250	VL2225M4	18
27	109	12500	0.6	CB250	VL2225M2	18
26	38	13164	0.6	CB250	VL2280S6	18

1.7 - Motoriduttori

n_2 min^{-1}	ir	T2 Nm	FS'		55.0 kW	Ptn kW
78	38	5511	1.0	CB250	VL2250M2	21
57	52	7448	0.9	CB250	VL2250M2	20
48	62	8882	0.8	CB250	VL2250M2	20
39	38	10788	0.7	CB250	VL2250M4	19
38	78	11035	0.7	CB250	VL2250M2	19

1.7 - *Gearmotors*

n_2 min^{-1}	ir	T2 Nm	FS'		75.0 kW	Ptn kW
78	38	7502	0.7	CB250	VL2280S2	21
57	52	10141	0.6	CB250	VL2280S2	20

1.7 - Getriebemotoren

n_2 min^{-1}	ir	T2 Nm	FS'			Ptn kW

N.B.
Per i riduttori per i quali **Ptn < Potenza motore elettrico** è opportuno effettuare la verifica della potenza limite termico secondo le indicazioni riportate nel par. 1.7-A

NOTE.
For the gearboxes with **Ptn < Power electric motor** *it is aslo necessary to obey the therminal capacity like shown on chapter 1.7-A.*

HINWEIS.
Bei den mit **Ptn < Leistung Motor** , ist außerdem die thermische Leistungsgrenze zu beachten (s. Kap. 1.7-A).

1.8 Dimensioni — *1.8 Dimensions* — 1.8 Abmessungen

S

RI

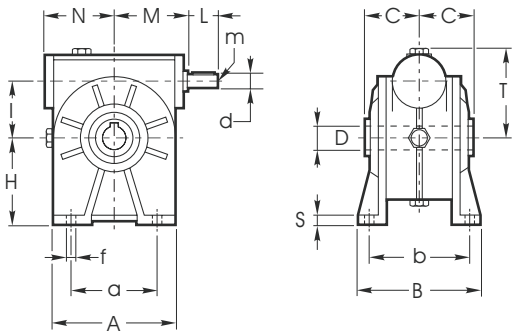

RMI

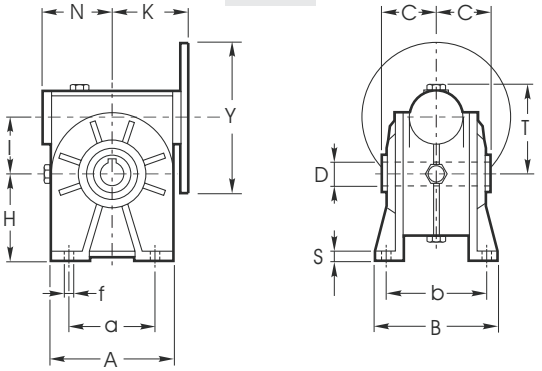

I

RI

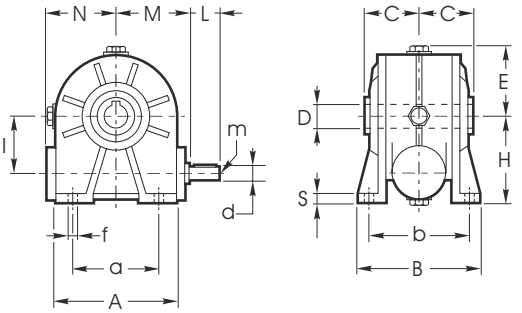

RMI

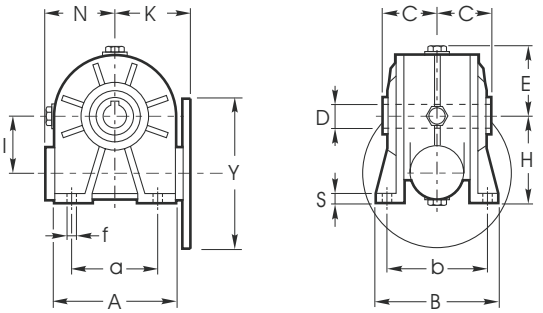

D

RI

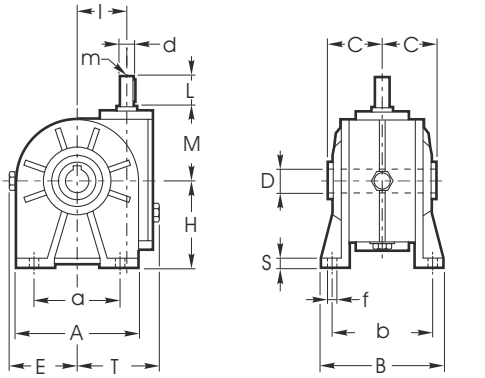

RMI

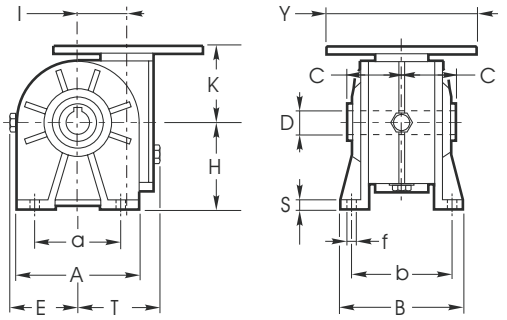

Dimensioni generali / *Dimensions* / Allgemeine Abmessungen												
Dimensions		**28**	**40**	**50**	**63**	**70**	**85**	**110**	**130**	**150**	**180**	**215**	**250**
C		30	41	49	60	60	61	77,5	90	105	120	140	160
D	Standard	14	19	24	25	28	32	42	48	55	65	90	110
	Optional	-	18	25	-	-	35	-	-	-	-	-	-
tollerance D		H7	H7	H7	H7	H7	H7	H7	H7	H7	H7	H7	H7
I		28	40	50	63	70	85	110	130	150	180	215	250
N		41	52	59,5	71,5	92	111	142	161,5	189	232	275	329
E		40	59	69	81	87	105	135	154	178	210	249	289
T		49	66	80	99	108	135	170	195	224	265	332	383

S - I - D - Versioni / *Versions* / Ausführungen												
Versions S - I - D	**28**	**40**	**50**	**63**	**70**	**85**	**110**	**130**	**150**	**180**	**215**	**250**
A	67	100	120	140	158	193	250	286	336	400	440	500
a	52	70	85	95	120	140	200	235	260	310	340	400
B	78	102	119	136	140	168	200	230	250	320	380	439
b	66 $^{+2}_{-6}$	84 ±3	99 ±3	111 $^{0}_{+5}$	116 $^{+2}_{-8}$	140	162	190	210	260	320	385
f	5,5	7	9	11	11	13	14	15	19	22	26	33
H	52	71	85	100	115	135	172	200	230	265	335	430
H1	-	-	-	-	-	-	-	-	-	-	260	300
S	6	8	10	11	13	15	17	19	20	22	25	30

1.8 Dimensioni

1.8 Dimensions

1.8 Abmessungen

RMI - Versione Entrata / *Input version* / Antriebausführung													
RMI		**28**	**40**	**50**	**63**	**70**	**85**	**110**	**130**	**150**	**180**	**215**	**250**
IEC	**Y**	**K**	**K**	**K**	**K**	**K**	**K**	**K**	**K**	**K**	**K**	**K**	**K**
56 B5	120	49	70.5	-	-	-	-	-	-	-	-	-	-
56 B14	80	49•	-	-	-	-	-	-	-	-	-	-	-
63 B5	140	-	70.5	80.5	-	-	-	-	-	-	-	-	-
63B14	90	49	70.5•	80.5•	-	-	-	-	-	-	-	-	-
71 B5	160	-	70.5	80.5	94.5	100	-	-	-	-	-	-	-
71B14	105	-	70.5	80.5•	94.5•	100•	-	-	-	-	-	-	-
80 B5	200	-	-	80.5	94.5	100	118	-	-	-	-	-	-
80 B14	120	-	-	80.5	94.5	100	118•	-	-	-	-	-	-
90 B5	200	-	-	-	94.5	100	118	145	-	-	-	-	-
90 B14	140	-	-	-	94.5	100	120	146	-	-	-	-	-
100-112 B5	250	-	-	-	-	-	120	145	163	189	-	-	-
100-112 B14	160	-	-	-	-	100	120	146	-	-	-	-	-
132 B5	300	-	-	-	-	-	-	145.5	163	189	234	285	335
132 B14	200	-	-	-	-	-	-	-	-	-	-	-	-
160 B5	350	-	-	-	-	-	-	-	-	196	234	285	335
180 B5	350	-	-	-	-	-	-	-	-	-	234	285	335
200 B5	400	-	-	-	-	-	-	-	-	-	-	*	*
225 B5	450	-	-	-	-	-	-	-	-	-	-	*	*

(•) Vedi designazione 19 - PMT

(•) See designation 19 - PMT

(•) Siehe Beschreibung 19 - PMT

* A richiesta / On request / Auf Anfrage

RI - Versione Entrata / *Input version* / Antriebausführung												
RI	**28**	**40**	**50**	**63**	**70**	**85**	**110**	**130**	**150**	**180**	**215**	**250**
d	9	11	14	18	19	24	28	38	42	48	48	55
tollerance d	j6	j6	j6	j6	j6	j6	j6	j6	j6	j6	m6	m6
L	20	22	30	45	40	50	60	80	100	110	110	110
m	M4	M5	M6	M6	M8	M8	M8	M10	M12	M14	M16	M16
M	47	64	74	96	97	115	146	166	193	235	289,5	334

PARTICOLARE CORPO - 215 - 250

DETAIL OF THE GEARCASE - 215 - 250

DETAIL DES GEHÄUSES - 215 - 250

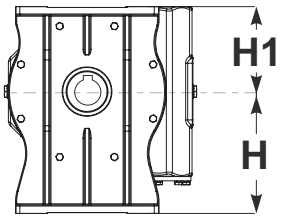

215
250

1.8 Dimensioni — *1.8 Dimensions* — 1.8 Abmessungen

P

RI 28

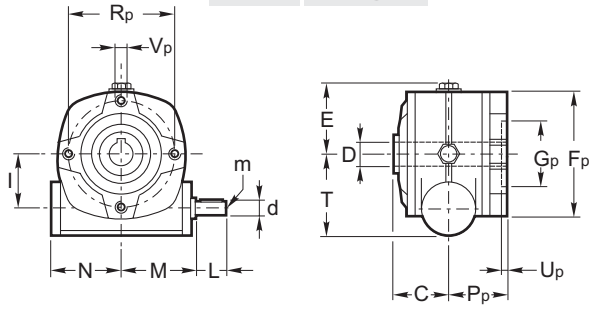

RMI 28

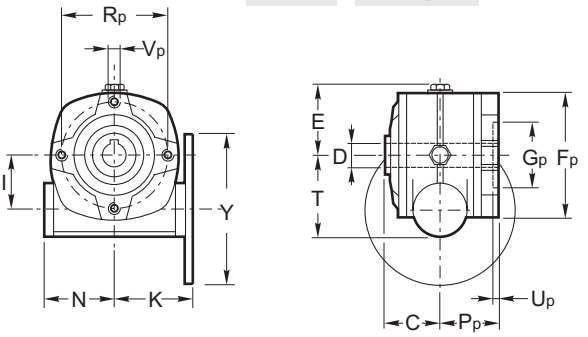

P / PP

RI 40...250

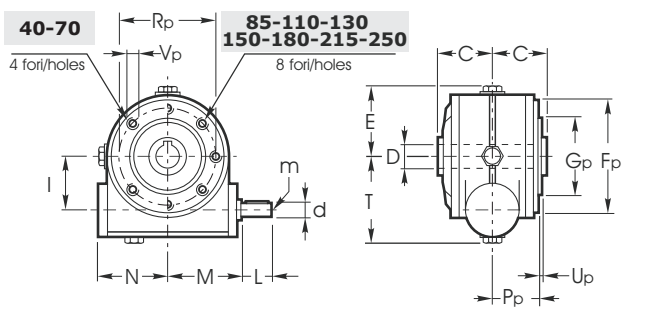

RMI 40...250

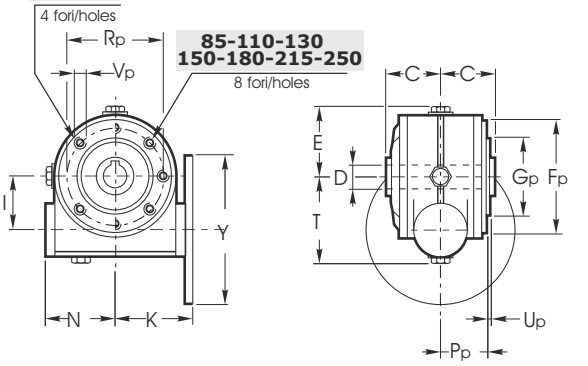

FL / F.

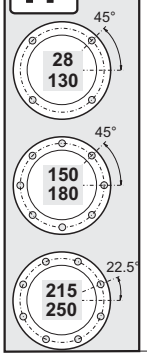

RI

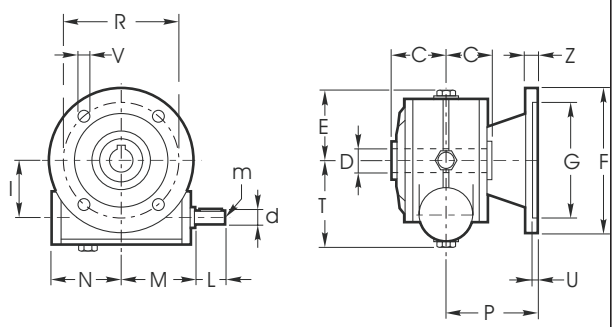

RMI

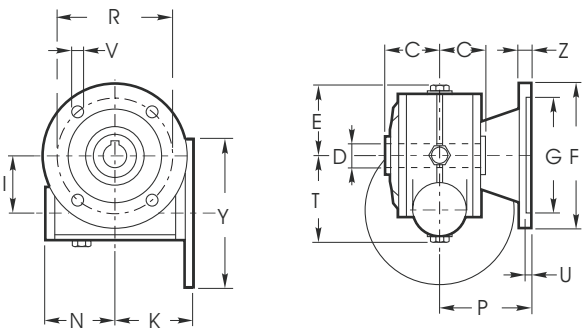

Dimensioni generali / *Dimensions* / Allgemeine Abmessungen												
Dimensions		**28**	**40**	**50**	**63**	**70**	**85**	**110**	**130**	**150**	**180**	**215**	**250**
C		30	41	49	60	60	61	77,5	90	105	120	140	160
D	Standard	14	19	24	25	28	32	42	48	55	65	90	110
	Optional	-	18	25	-	-	35	-	-	-	-	-	-
tollerance D		H7	H7	H7	H7	H7	H7	H7	H7	H7	H7	H7	H7
I		28	40	50	63	70	85	110	130	150	180	215	250
N		41	52	59,5	71,5	92	111	142	161,5	189	232	275	329
E		40	59	69	81	87	105	135	154	178	210	249	289
T		49	66	80	99	108	135	170	195	224	265	332	383

P - PP - Versioni / *Versions* / Ausführungen												
Versions - P - PP	**28**	**40**	**50**	**63**	**70**	**85**	**110**	**130**	**150**	**180**	**215**	**250**
Fp	67	95	105	105	120	144	200	242	250	300	348	450
Gp	42	60	70	70	80	110	130	180	180	230	250	350
tollerance Gp	H8	e8	e8	e8	e8	e8	e8	e8	e8	e8	e8	e8
Pp	36	38	49	57,5	57	56,5	74	87	102	117	135	155
Rp	56	83	85	85	100	130	165	215	215	265	300	400
Up	7	2	2,5	3,5	5	3,5	3	5	5	5	5	5
Vp	M6	M6	M8	M8	M8	M10	M12	M12	M14	M16	M16	M16

1.8 Dimensioni

1.8 Dimensions

1.8 Abmessungen

FL - Versioni / *Versions* / Ausführungen												
Versions FL	**28**	**40**	**50**	**63**	**70**	**85**	**110**	**130**	**150**	**180**	**215**	**250**
	FL	**FL°**	**FL°**	**FL°**	**FL°**	**FL**	**FL**	**FL**	**FL**	**FL**	**FL**	**FL**
F	70	140	160	180	200	200	250	300	350	400	550	550
G	40	95	110	115	130	130	180	230	250	300	450	450
tollerance G	H8	H8	H8	H8	H8	H8	H8	H8	H8	H8	H8	H8
P	49	82	91,5	116	111	100	150	150	160	180	240	245
R	56	115	130	150	165	165^{0}_{+11}	215	265	300	350	500	500
U	5	5	5	5	5	5	5	5	6	6,5	7	6
V	6	8,5	10	11	13	13	15	15	19	22	18	22
Z	5	9	10	11	11	12	16	18	18	22	25	25

F1-F2-F3-F4 - Versioni / *Versions* / Ausführungen																					
Versions F1-F2-F3-F4	**28**		**40**		**50**				**63**			**70**			**85**			**110**			**180**
	F1	**F2**	**F1**	**F2**	**F1**	**F2**	**F3**	**F4**	**F1°**	**F2°**	**F3°**	**F1°**	**F2°**	**F3**	**F1**	**F2**	**F3**	**F1**	**F2**	**F3**	**F2**
F	80	95	106	120	125	125	140	125	175	200	160	175	175	160	200	210	160	200	270	270	400
G	50	70	60	80	70	70	95	70	115	130	110	115	115	110	130	152	110	130	170	170	300
tollerance G	H8	H8	H8	H8	H8	H8	H8	H8	H8	H8	H8	H8	H8	H8	H8	H8	H8	H8	H8	H8	H8
P	53	72	69	62	93	73	75	85	86	102	82	116	85	101	141	119,5	91	115	131,5	178	150
R	62^{0}_{+6}	85	87	100	90^{0}_{+9}	100	115	90^{0}_{+9}	150	165	130	150	150	130	165	176	130	165	230	230	350
U	4	4	5	5	5	4	4	5	5	5	5	5	5	6	6	5	5	5	10	10	6,5
V	6	6,5	8,5	9	10,5	9	9	10,5	11	13	10	11	11	11	13	13	11,5	13	13,5	13,5	22
Z	7	8	9	9	10	9	9	11	11	11	11	10	10	11	12	14	10	12	18	18	22

La versione contrassegnata con il simbolo (°) è ottenuta applicando una flangia modulare sulla flangia pendolare della versione P-PP.

Version that is marked with (°) is obtained by applying a modular flange onto the shaft-mounted flange of the P-PP version.

Die mit (°) gekennzeichneten Version erhält man, indem ein Modulflansch an den Flansch mit Drehmomentstütze der P-PP Version befestigt wird.

RMI - Versione Entrata / *Input version* / Antriebausführung													
RMI		**28**	**40**	**50**	**63**	**70**	**85**	**110**	**130**	**150**	**180**	**215**	**250**
IEC	**Y**	**K**	**K**	**K**	**K**	**K**	**K**	**K**	**K**	**K**	**K**	**K**	**K**
56 B5	120	49	70.5	-	-	-	-	-	-	-	-	-	-
56 B14	80	49•	-	-	-	-	-	-	-	-	-	-	-
63 B5	140	-	70.5	80.5	-	-	-	-	-	-	-	-	-
63B14	90	49	70.5•	80.5•	-	-	-	-	-	-	-	-	-
71 B5	160	-	70.5	80.5	94.5	100	-	-	-	-	-	-	-
71B14	105	-	70.5	80.5•	94.5•	100•	-	-	-	-	-	-	-
80 B5	200	-	-	80.5	94.5	100	118	-	-	-	-	-	-
80 B14	120	-	-	80.5	94.5	100	118•	-	-	-	-	-	-
90 B5	200	-	-	-	94.5	100	118	145	-	-	-	-	-
90 B14	140	-	-	-	94.5	100	120	146	-	-	-	-	-
100-112 B5	250	-	-	-	-	-	120	145	163	189	-	-	-
100-112 B14	160	-	-	-	-	100	120	146	-	-	-	-	-
132 B5	300	-	-	-	-	-	-	145.5	163	189	234	285	335
132 B14	200	-	-	-	-	-	-	-	-	-	-	-	-
160 B5	350	-	-	-	-	-	-	-	-	196	234	285	335
180 B5	350	-	-	-	-	-	-	-	-	-	234	285	335
200 B5	400	-	-	-	-	-	-	-	-	-	-	*	*
225 B5	450	-	-	-	-	-	-	-	-	-	-	*	*

(•) Vedi designazione 19 - PMT

(•) See designation 19 - PMT

(•) Siehe Beschreibung 19 - PMT

* A richiesta / On request / Auf Anfrage

RI - Versione Entrata / *Input version* / Antriebausführung												
RI	**28**	**40**	**50**	**63**	**70**	**85**	**110**	**130**	**150**	**180**	**215**	**250**
d	9	11	14	18	19	24	28	38	42	48	48	55
tollerance d	j6	j6	j6	j6	j6	j6	j6	j6	j6	j6	m6	m6
L	20	22	30	45	40	50	60	80	100	110	110	110
m	M4	M5	M6	M6	M8	M8	M8	M10	M12	M14	M16	M16
M	47	64	74	96	97	115	146	166	193	235	289,5	334

1.8 Dimensioni — *1.8 Dimensions* — 1.8 Abmessungen

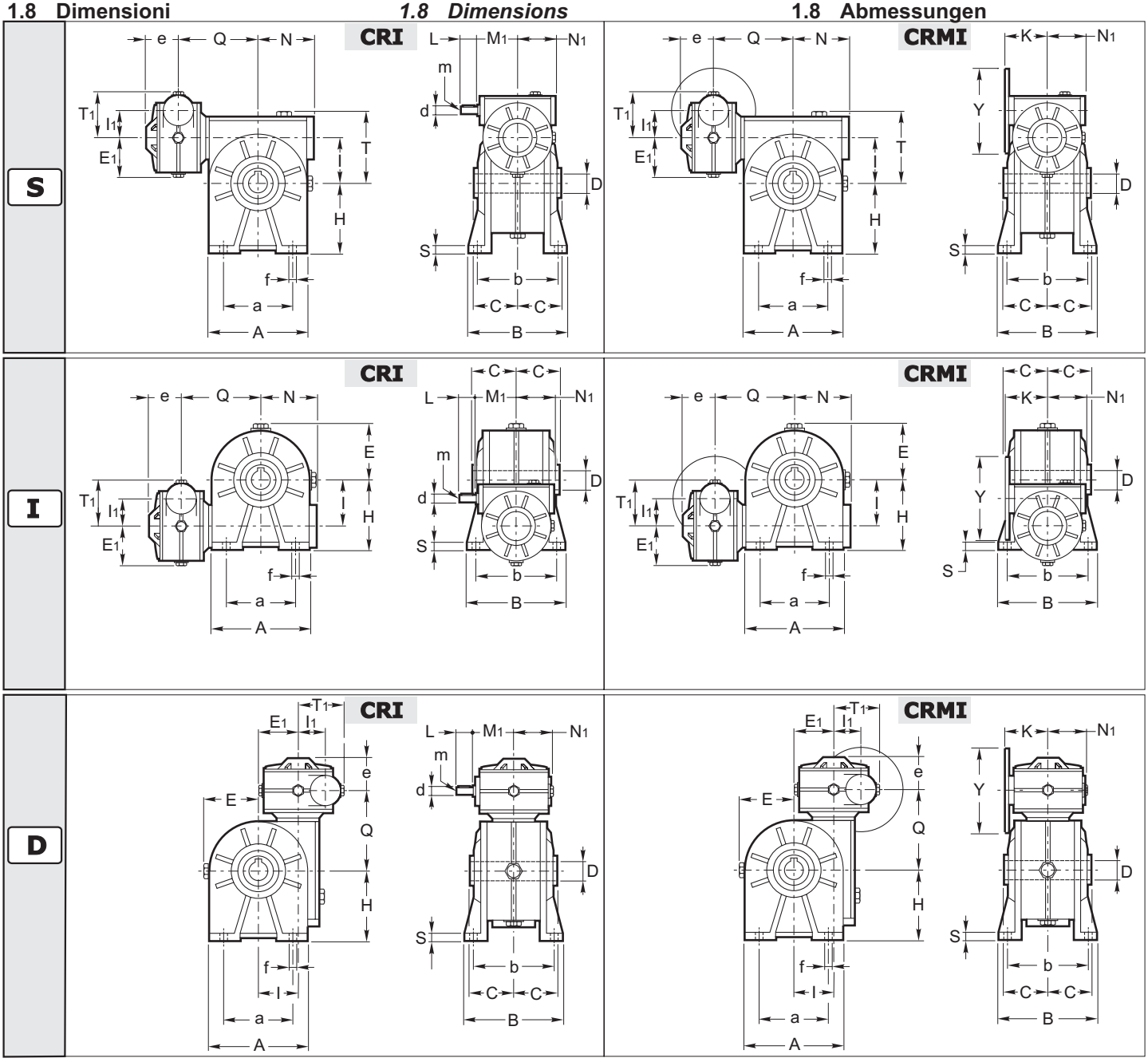

Dimensioni generali / *Dimensions* / Allgemeine Abmessungen																												
Dimensions	28 28	28 40	40 40	28 50	40 50	28 63	40 63	28 70	40 70	50 70	63 70	40 85	50 85	63 85	70 85	50 110	63 110	70 110	85 110	63 130	70 130	85 130	85 150	110 150	85 180	110 180	130 180	110 215	130 250
C	30	41	41	49	49	60	60	60	60	60	60	61	61	61	61	77,5	77,5	77,5	77,5	90	90	90	105	105	120	120	120	140	160
D (standard)	14	19	19	24	24	25	25	28	28	28	28	32	32	32	32	42	42	42	42	48	48	48	55	55	65	65	65	90	110
D (Optional)	-	18	18	25	25	-	-	-	-	-	-	35	35	35	35	-	-	-	-	-	-	-	-	-	-	-	-	-	-
tollerance D	H7	H7	H7	H7	H7	H7	H7	H7	H7	H7	H7	H7	H7	H7	H7	H7	H7	H7	H7	H7	H7	H7	H7	H7	H7	H7	H7	H7	H7
l1	28	28	40	28	40	28	40	28	40	50	63	40	50	63	70	50	63	70	85	63	70	85	85	110	85	110	130	110	130
l	28	40	40	50	50	63	63	70	70	70	70	85	85	85	85	110	110	110	110	130	130	130	150	150	180	180	180	215	250
N1	41	41	52	41	52	41	52	41	52	59,5	71,5	52	59,5	71,5	92	59,5	71,5	92	111	71,5	92	111	111	142	111	142	159	142	159
N	44,5	61,5	61,5	72,5	72,5	84	84	92	92	92	92	111	111	111	111	142	142	142	142	161,5	161,5	161,5	189	189	232	232	232	275	329
E1	40	40	59	40	59	40	59	40	59	69	81	59	69	81	87	69	81	87	105	81	87	105	105	135	105	135	150	135	150
E	40	59	59	69	69	81	81	87	87	87	87	105	105	105	105	135	135	135	135	154	154	154	178	178	210	210	210	249	289
e	35	35	49	35	49	35	49	35	49	59	69	49	59	69	68	59	69	68	71	69	68	71	71	92	71	92	102	92	102
Q	90	109	153	115,5	163	135,5	146	140,5	151	149	182	202	173	198	165	237,5	228	191	195	265	214	213	240	254	283	296	306	435	485
T1	49	49	66	49	66	49	66	49	66	80	99	66	80	99	108	80	99	108	135	99	108	135	135	170	135	170	200	170	200
T	49	66	66	80	80	99	99	108	108	108	108	135	135	135	135	170	170	170	170	195	195	195	224	224	265	265	265	332	383

Riduttori con accoppiamento eseguito con kit di montaggio, vedi pag.B95.

Gearboxes assembled with combination kit, see also page B95.

Getriebe angebaut mit kombinationskit, siehe auch Seite B95.

1.8 Dimensioni *1.8 Dimensions* 1.8 Abmessungen

Dimensioni generali / *Dimensions* / Allgemeine Abmessungen

Versions S - I - D	28 28	28 40	40 40	28 50	40 50	28 63	40 63	28 70	40 70	50 70	63 70	40 85	50 85	63 85	70 85	50 110	63 110	70 110	85 110	63 130	70 130	85 130	85 150	110 150	85 180	110 180	130 180	110 215	130 250
A	67	100	100	120	120	140	140	158	158	158	158	193	193	193	193	250	250	250	250	286	286	286	336	336	400	400	400	440	500
a	52	70	70	85	85	95	95	120	120	120	120	140	140	140	140	200	200	200	200	235	235	235	260	260	310	310	310	340	400
B	78	102	102	119	119	136	136	140	140	140	140	168	168	168	168	200	200	200	200	230	230	230	250	250	320	320	320	380	439
b	66	84	84	99	99	111	111	116	116	116	116	140	140	140	140	162	162	162	162	190	190	190	210	210	260	260	260	320	385
	+2 -6	±3		±3		0 +5		+2 -8				—																	
f	5,5	7	7	9	9	11	11	11	11	11	11	13	13	13	13	14	14	14	14	15	15	15	19	19	22	22	22	26	33
H	52	71	71	85	85	100	100	115	115	115	115	135	135	135	135	172	172	172	172	200	200	200	230	230	265	265	265	335	430
H1	-	-	-	-	-	-	-	-	-	-	-	-	-	-	-	-	-	-	-	-	-	-	-	-	-	-	-	260	300
S	6	8	8	10	10	11	11	13	13	13	13	15	15	15	15	17	17	17	17	19	19	19	20	20	22	22	22	25	30

B

PARTICOLARE CORPO - 215 - 250 *DETAIL OF THE GEARCASE - 215 - 250* **DETAIL DES GEHÄUSES - 215 - 250**

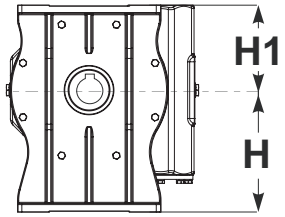

215
250

CRMI - Versione Entrata / *Input version* / Antriebausführung

CRMI		28/...	40/...	50/...	63/...	70/...	85/...	110/...	130/...
IEC	**Y**	**K**	**K**	**K**	**K**	**K**	**K**	**K**	**K**
56 B5	120	49	70.5	-	-	-	-	-	-
56 B14	80	49•	-	-	-	-	-	-	-
63 B5	140	-	70.5	80.5	-	-	-	-	-
63B14	90	49	70.5•	80.5•	-	-	-	-	-
71 B5	160	-	70.5	80.5	94.5	100	-	-	-
71B14	105	-	70.5	80.5•	94.5•	100•	-	-	-
80 B5	200	-	-	80.5	94.5	100	118	-	-
80 B14	120	-	-	80.5	94.5	100	118•	-	-
90 B5	200	-	-	-	94.5	100	118	145	-
90 B14	140	-	-	-	94.5	100	120	146	-
100-112 B5	250	-	-	-	-	-	120	145	163
100-112 B14	160	-	-	-	-	100	120	146	-
132 B5	300	-	-	-	-	-	-	145.5	163
132 B14	200	-	-	-	-	-	-	-	-
160 B5	350	-	-	-	-	-	-	-	-
180 B5	350	-	-	-	-	-	-	-	-
200 B5	400	-	-	-	-	-	-	-	-
225 B5	450	-	-	-	-	-	-	-	-

(•) Vedi designazione 19 - PMT *(•) See designation 19 - PMT* (•) Siehe Beschreibung 19 - PMT

CRI - Versione Entrata / *Input version* / Antriebausführung

CRI	28/...	40/...	50/...	63/...	70/...	85/...	110/...	130/...
d	9	11	14	18	19	24	28	38
tollerance d	j6	j6	j6	j6	j6	j6	j6	j6
L	20	22	30	45	40	50	60	80
m	M4	M5	M6	M6	M8	M8	M8	M10
M1	47	64	74	96	97	115	146	166

1.8 Dimensioni — *1.8 Dimensions* — 1.8 Abmessungen

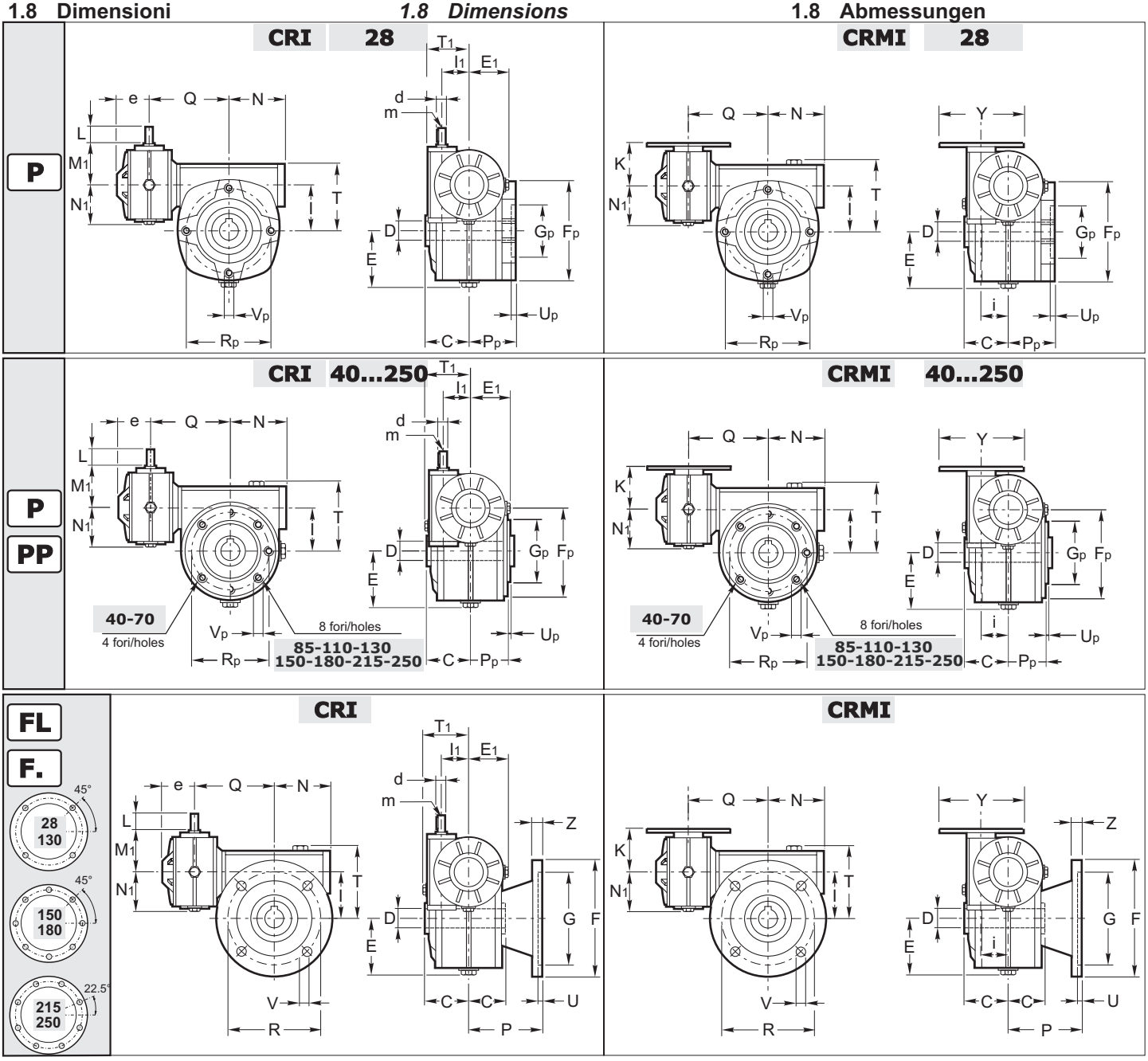

Dimensioni generali / *Dimensions* / Allgemeine Abmessungen																												
Dimensions	28 28	28 40	40 40	28 50	40 50	28 63	40 63	28 70	40 70	50 70	63 70	40 85	50 85	63 85	70 85	50 110	63 110	70 110	85 110	63 130	70 130	85 130	85 150	110 150	85 180	110 180	130 180	110 215	130 250
C	30	41	41	49	49	60	60	60	60	60	60	61	61	61	61	77,5	77,5	77,5	77,5	90	90	90	105	105	120	120	120	140	160
D (standard)	14	19	19	24	24	25	25	28	28	28	28	32	32	32	32	42	42	42	42	48	48	48	55	55	65	65	65	90	110
D (Optional)	-	18	18	25	25	-	-	-	-	-	-	35	35	35	35	-	-	-	-	-	-	-	-	-	-	-	-	-	-
tollerance D	H7	H7	H7	H7	H7	H7	H7	H7	H7	H7	H7	H7	H7	H7	H7	H7	H7	H7	H7	H7	H7	H7	H7	H7	H7	H7	H7	H7	H7
I1	28	28	40	28	40	28	40	28	40	50	63	40	50	63	70	50	63	70	85	63	70	85	85	110	85	110	130	110	130
I	28	40	40	50	50	63	63	70	70	70	70	85	85	85	85	110	110	110	110	130	130	130	150	150	180	180	180	215	250
N1	41	41	52	41	52	41	52	41	52	59,5	71,5	52	59,5	71,5	92	59,5	71,5	92	111	71,5	92	111	111	142	111	142	159	142	159
N	44,5	61,5	61,5	72,5	72,5	84	84	92	92	92	92	111	111	111	111	142	142	142	142	161,5	161,5	161,5	189	189	232	232	232	275	329
E1	40	40	59	40	59	40	59	40	59	69	81	59	69	81	87	69	81	87	105	81	87	105	105	135	105	135	150	135	150
E	40	59	59	69	69	81	81	87	87	87	87	105	105	105	105	135	135	135	135	154	154	154	178	178	210	210	210	249	289
e	35	35	49	35	49	35	49	35	49	59	69	49	59	69	68	59	69	68	71	69	68	71	71	92	71	92	102	92	102
Q	90	109	153	115,5	163	135,5	146	140,5	151	149	182	202	173	198	165	237,5	228	191	195	265	214	213	240	254	283	296	306	435	485
T1	49	49	66	49	66	49	66	49	66	80	99	66	80	99	108	80	99	108	135	99	108	135	135	170	135	170	200	170	200
T	49	66	66	80	80	99	99	108	108	108	108	135	135	135	135	170	170	170	170	195	195	195	224	224	265	265	265	332	383

Riduttori con accoppiamento eseguito con kit di montaggio, vedi pag.B95.

Gearboxes assembled with combination kit, see also page B95.

Getriebe angebaut mit kombinationskit, siehe auch Seite B95.

1.8 Dimensioni

1.8 Dimensions

1.8 Abmessungen

P - PP - Versioni / *Versions* / Ausführungen												
Versions - P - PP	**.../28**	**.../40**	**.../50**	**.../63**	**.../70**	**.../85**	**.../110**	**.../130**	**.../150**	**.../180**	**.../215**	**.../250**
Fp	67	95	105	105	120	144	200	242	250	300	348	450
Gp	42	60	70	70	80	110	130	180	180	230	250	350
tollerance Gp	H8	e8	e8	e8	e8	e8	e8	e8	e8	e8	e8	e8
Pp	36	38	49	57,5	57	56,5	74	87	102	117	135	155
Rp	56	83	85	85	100	130	165	215	215	265	300	400
Up	7	2	2,5	3,5	5	3,5	3	5	5	5	5	5
Vp	M6	M6	M8	M8	M8	M10	M12	M12	M14	M16	M16	M16

B

FL - Versioni / *Versions* / Ausführungen												
Versions FL	**.../28**	**.../40**	**.../50**	**.../63**	**.../70**	**.../85**	**.../110**	**.../130**	**.../150**	**.../180**	**.../215**	**.../250**
	FL	**FL°**	**FL°**	**FL°**	**FL°**	**FL**	**FL**	**FL**	**FL**	**FL**	**FL**	**FL**
F	70	140	160	180	200	200	250	300	350	400	550	550
G	40	95	110	115	130	130	180	230	250	300	450	450
tollerance G	H8	H8	H8	H8	H8	H8	H8	H8	H8	H8	H8	H8
P	49	82	91,5	116	111	100	150	150	160	180	240	245
R	56	115	130	150	165	165^{0}_{+11}	215	265	300	350	500	500
U	5	5	5	5	5	5	5	5	6	6,5	7	6
V	6	8,5	10	11	13	13	15	15	19	22	18	22
Z	5	9	10	11	11	12	16	18	18	22	25	25

F1-F2-F3-F4 - Versioni / *Versions* / Ausführungen																					
Versions F1-F2-F3-F4	**.../28**		**.../40**		**.../50**				**.../63**			**.../70**			**.../85**			**.../110**			**.../180**
	F1	**F2**	**F1**	**F2**	**F1**	**F2**	**F3**	**F4**	**F1°**	**F2°**	**F3°**	**F1°**	**F2°**	**F3**	**F1**	**F2**	**F3**	**F1**	**F2**	**F3**	**F2**
F	80	95	106	120	125	125	140	125	175	200	160	175	175	160	200	210	160	200	270	270	400
G	50	70	60	80	70	70	95	70	115	130	110	115	115	110	130	152	110	130	170	170	300
tollerance G	H8	H8	H8	H8	H8	H8	H8	H8	H8	H8	H8	H8	H8	H8	H8	H8	H8	H8	H8	H8	H8
P	53	72	69	62	93	73	75	85	86	102	82	116	85	101	141	119,5	91	115	131,5	178	150
R	62^{0}_{+6}	85	87	100	90^{0}_{+9}	100	115	$90^{0}_{+4.5}$	150	165	130	150	150	130	165	176	130	165	230	230	350
U	4	4	5	5	5	4	4	5	5	5	5	5	5	6	6	5	5	5	10	10	6,5
V	6	6,5	8,5	9	10,5	9	9	10,5	11	13	10	11	11	11	13	13	11,5	13	13,5	13,5	22
Z	7	8	9	9	10	9	9	11	11	11	11	10	10	11	12	14	10	12	18	18	22

La versione contrassegnata con il simbolo (°) è ottenuta applicando una flangia modulare sulla flangia pendolare della versione P-PP.

Version that is marked with (°) is obtained by applying a modular flange onto the shaft-mounted flange of the P-PP version.

Die mit (°) gekennzeichneten Version erhält man, indem ein Modulflansch an den Flansch mit Drehmomentstütze der P-PP Version befestigt wird.

CRMI - Versione Entrata / *Input version* / Antriebausführung									
CRMI		28/...	40/...	50/...	63/...	70/...	85/...	110/...	130/...
IEC	**Y**	**K**	**K**	**K**	**K**	**K**	**K**	**K**	**K**
56 B5	120	49	70.5	-	-	-	-	-	-
56 B14	80	49•	-	-	-	-	-	-	-
63 B5	140	-	70.5	80.5	-	-	-	-	-
63B14	90	49	70.5•	80.5•	-	-	-	-	-
71 B5	160	-	70.5	80.5	94.5	100	-	-	-
71B14	105	-	70.5	80.5•	94.5•	100•	-	-	-
80 B5	200	-	-	80.5	94.5	100	118	-	-
80 B14	120	-	-	80.5	94.5	100	118•	-	-
90 B5	200	-	-	-	94.5	100	118	145	-
90 B14	140	-	-	-	94.5	100	120	146	-
100-112 B5	250	-	-	-	-	-	120	145	163
100-112 B14	160	-	-	-	-	100	120	146	-
132 B5	300	-	-	-	-	-	-	145.5	163
132 B14	200	-	-	-	-	-	-	-	-
160 B5	350	-	-	-	-	-	-	-	-
180 B5	350	-	-	-	-	-	-	-	-
200 B5	400	-	-	-	-	-	-	-	-
225 B5	450	-	-	-	-	-	-	-	-

(•) Vedi designazione 19 - PMT

(•) See designation 19 - PMT

(•) Siehe Beschreibung 19 - PMT

CRI - Versione Entrata / *Input version* / Antriebausführung								
CRI	**28/...**	**40/...**	**50/...**	**63/...**	**70/...**	**85/...**	**110/...**	**130/...**
d	9	11	14	18	19	24	28	38
tollerance d	j6	j6	j6	j6	j6	j6	j6	j6
L	20	22	30	45	40	50	60	80
m	M4	M5	M6	M6	M8	M8	M8	M10
M1	47	64	74	96	97	115	146	166

1.8 Dimensioni *1.8 Dimensions* 1.8 Abmessungen

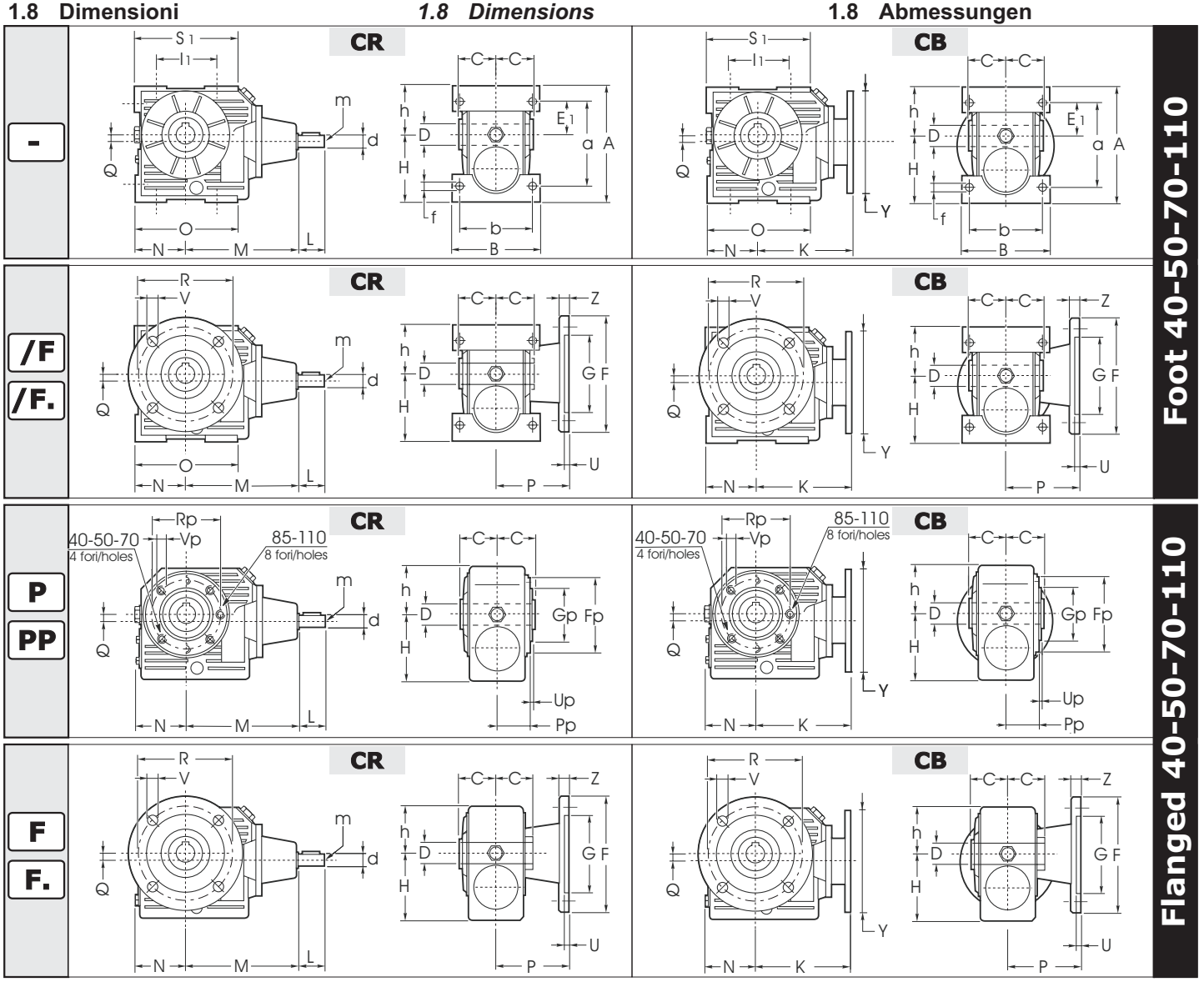

Dimensioni generali / *Dimensions* / Allgemeine Abmessungen						
Dimensions		**40**	**50**	**70**	**85**	**110**
C		41	49	60	61	77,5
D	Standard	19	24	28	32	42
	Optional	18	25	-	35	-
tollerance D		H7	H7	H7	H7	H7
N		59	69	93	116	142
Q		7	9	17,5	29	43

Foot - Versioni / *Versions* / Ausführungen					
Versions Foot	**40**	**50**	**70**	**85**	**110**
A	135	166	215	252	330
a	100	120	160	188	244
B	102	120	140	170	200
b	84	99	116	140	162
E1	40	46	61	74	97
f	7	9	11	13	14
H	78	97	127	145	190
h	57	69	88	107	140
l1	70	85	120	140	200
O	117	130	193	231	282
S1	117	130	186	221	277

1.8 Dimensioni

1.8 Dimensions

1.8 Abmessungen

P - PP - Versioni / *Versions* / Ausführungen					
Versions - P - PP	**40**	**50**	**70**	**85**	**110**
Fp	95	105	120	144	200
Gp	60	70	80	110	130
tollerance Gp	e8	e8	e8	e8	e8
Pp	38	49	57	56,5	74
Rp	83	85	100	130	165
Up	2	2,5	5	3,5	3
Vp	M6	M8	M8	M10	M12

FL - Versioni / *Versions* / Ausführungen					
Versions FL	**40**	**50**	**70**	**85**	**110**
	FL°	**FL°**	**FL°**	**FL**	**FL**
F	140	160	200	200	250
G	95	110	130	130	180
tollerance G	H8	H8	H8	H8	H8
P	82	91,5	111	100	150
R	115	130	165^{0}_{+11}	165	215
U	5	5	5	5	5
V	8,5	10	13	13	15
Z	9	10	11	12	16

F1-F2-F3-F4 - Versioni / *Versions* / Ausführungen															
Versions F1-F2-F3-F4	**40**		**50**				**70**			**85**			**110**		
	F1	**F2**	**F1**	**F2**	**F3**	**F4**	**F1°**	**F2°**	**F3**	**F1**	**F2**	**F3**	**F1**	**F2**	**F3**
F	106	120	125	125	140	125	175	175	160	200	210	160	200	270	270
G	60	80	70	70	95	70	115	115	110	130	152	110	130	170	170
tollerance G	H8	H8	H8	H8	H8	H8	H8	H8	H8	H8	H8	H8	H8	H8	H8
P	69	62	93	73	75	85	116	85	101	141	119,5	91	115	131,5	178
R	87	100	90^{0}_{+9}	100	115	$90^{0}_{+4.5}$	150	150	130	165	176	130	165	230	230
U	5	5	5	4	4	5	5	5	6	6	5	5	5	10	10
V	8,5	9	10,5	9	9	10,5	11	11	11	13	13	11,5	13	13,5	13,5
Z	9	9	10	9	9	11	10	10	11	12	14	10	12	18	18

La versione contrassegnata con il simbolo (°) è ottenuta applicando una flangia modulare sulla flangia pendolare della versione P-PP.

Version that is marked with (°) is obtained by applying a modular flange onto the shaft-mounted flange of the P-PP version.

Die mit (°) gekennzeichneten Version erhält man, indem ein Modulflansch an den Flansch mit Drehmomentstütze der P-PP Version befestigt wird.

CB - Versione Entrata / *Input version* / Antriebausführung						
CB		**40**	**50**	**70**	**85**	**110**
IEC	**Y**	**K**	**K**	**K**	**K**	**K**
56 B5	120	108	133	-	-	-
56 B14	80	109	133	-	-	-
63 B5	140	108	133	153	172.5	-
63B14	90	112•	133•	-	-	-
71 B5	160	-	133	153	172.5	-
71B14	105	-	-	-	-	-
80 B5	200	-	-	165	193	229
80 B14	120	-	-	-	-	-
90 B5	200	-	-	171	193	229
90 B14	140	-	-	-	-	-
100-112 B5	250	-	-	-	-	239
100-112 B14	160	-	-	-	-	-
132 B5	300	-	-	-	-	-
132 B14	200	-	-	-	-	-
160 B5	350	-	-	-	-	-
180 B5	350	-	-	-	-	-
200 B5	400	-	-	-	-	-
225 B5	450	-	-	-	-	-
250 B5	550	-	-	-	-	-
280 B5	550	-	-	-	-	-

(•) Vedi designazione 19 - PMT

(•) See designation 19 - PMT

(•) Siehe Beschreibung 19 - PMT

CR - Versione Entrata / *Input version* / Antriebausführung					
CR	**40**	**50**	**70**	**85**	**110**
d	14	19	24	28	32
tollerance d	j6	j6	j6	j6	j6
L	30	40	50	60	70
m	M6	M8	M8	M8	M10
M	137	143	188	212	264,5

1.8 Dimensioni *1.8 Dimensions* 1.8 Abmessungen

S

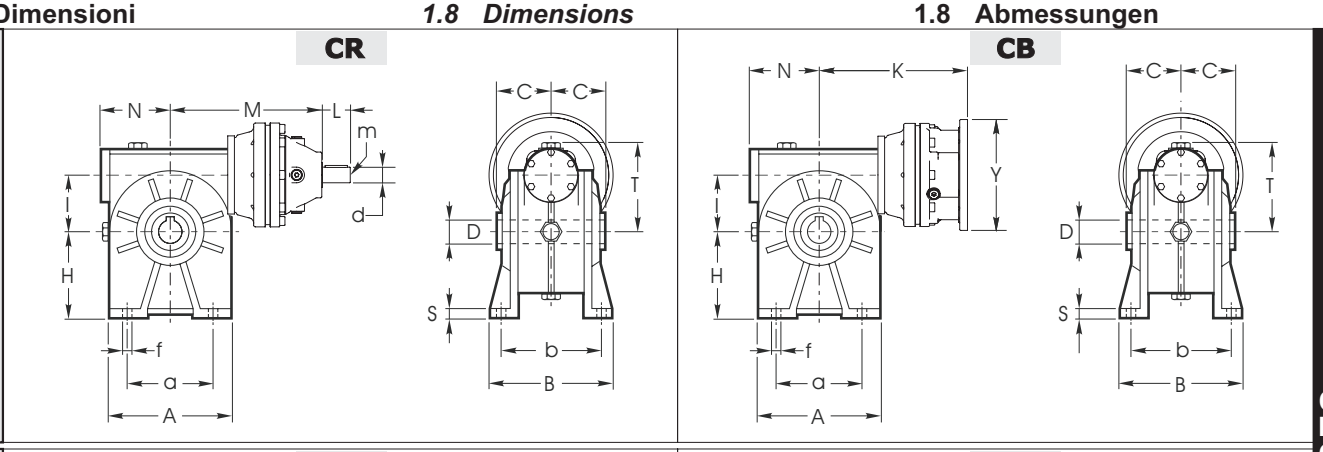

I

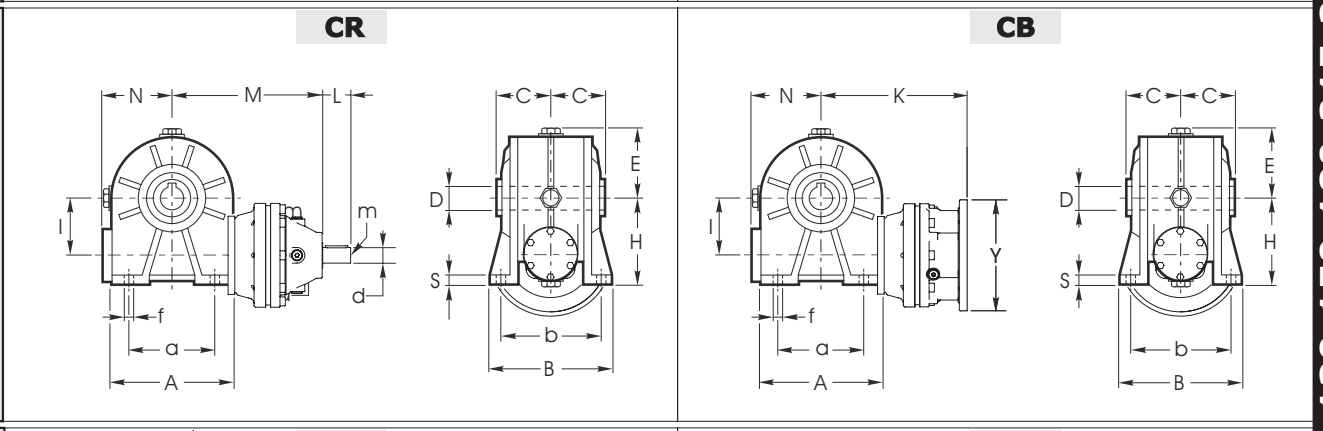

D

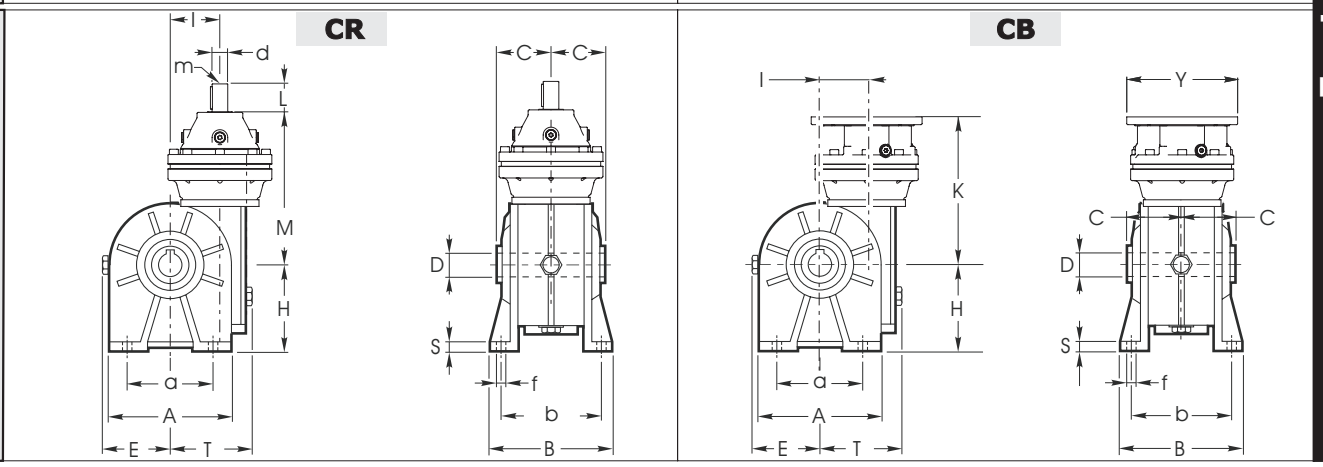

Foot 130-150-180-215-250

Dimensioni generali / *Dimensions* / Allgemeine Abmessungen						
Dimensions		**130**	**150**	**180**	**215**	**250**
C		90	105	120	140	160
D	Standard	48	55	65	90	110
	Optional	-	-	-	-	-
tollerance D		H7	H7	H7	H7	H7
I		130	150	180	215	250
N		161,5	189	232	275	329
E		154	178	210	249	289
T		195	224	265	332	383

S - I - D - Versioni / *Versions* / Ausführungen					
Versions S - I - D	**130**	**150**	**180**	**215**	**250**
A	286	336	400	440	500
a	235	260	310	340	400
B	230	250	320	380	439
b	190	210	260	320	385
f	15	19	22	26	33
H	200	230	265	335	430
H1	-	-	-	260	300
S	19	20	22	25	30

1.8 Dimensioni

1.8 Dimensions

1.8 Abmessungen

CB - Versione Entrata / *Input version* / Antriebausführung						
CB		**130**	**150**	**180**	**215**	**250**
IEC	**Y**	**K**	**K**	**K**	**K**	**K**
56 B5	120	-	-	-	-	-
56 B14	80	-	-	-	-	-
63 B5	140	295	333.5	386	463	523
63B14	90	-	-	-	-	-
71 B5	160	295	333.5	386	463	523
71B14	105	-	-	-	-	-
80 B5	200	295	333.5	386	463	523
80 B14	120	-	-	-	-	-
90 B5	200	295	333.5	386	463	523
90 B14	140	-	-	-	-	-
100-112 B5	250	303	341.5	394	471	531
100-112 B14	160	-	-	-	-	-
132 B5	300	324	362.5	415	492	552
132 B14	200	-	-	-	-	-
160 B5	350	358	396.5	465	542	591
180 B5	350	358	396.5	465	542	591
200 B5	400	-	-	449	526	589
225 B5	450	-	-	484	561	612.5
250 B5	550	-	-	-	-	612.5
280 B5	550	-	-	-	-	612.5

(•) Vedi designazione 19 - PMT

(•) See designation 19 - PMT

(•) Siehe Beschreibung 19 - PMT

CR - Versione Entrata / *Input version* / Antriebausführung					
CR	**130**	**150**	**180**	**215**	**250**
d	38	38	48	48	65
tollerance d	h7	h7	h7	h7	h7
L	58	58	82	82	105
m	M12	M12	M16	M16	M20
M	303	341,5	412	489	624,5

PARTICOLARE CORPO - 215 - 250

DETAIL OF THE GEARCASE - 215 - 250

DETAIL DES GEHÄUSES - 215 - 250

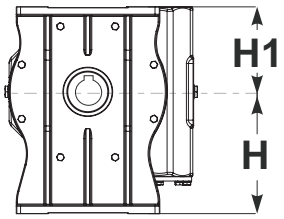

215
250

1.8 Dimensioni *1.8 Dimensions* 1.8 Abmessungen

Flanged 130-150-180-215-250

P **PP**

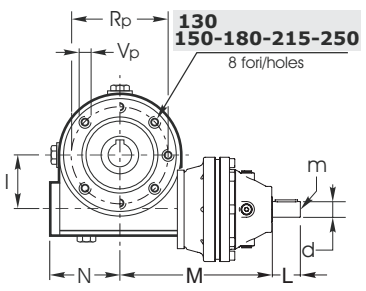

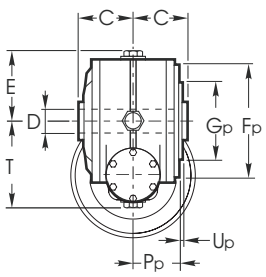

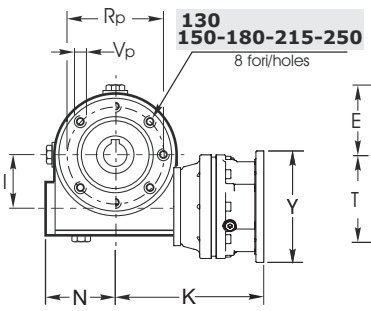

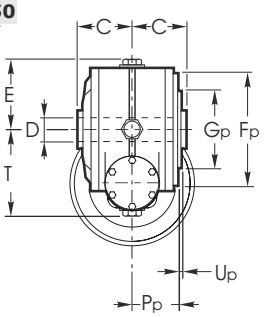

FL **F.**

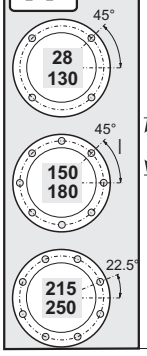

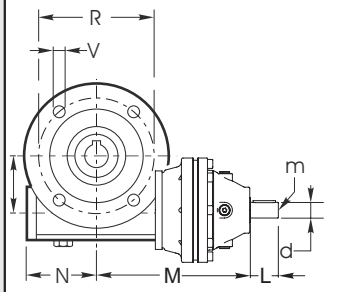

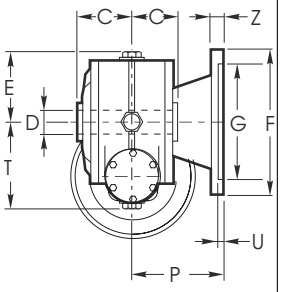

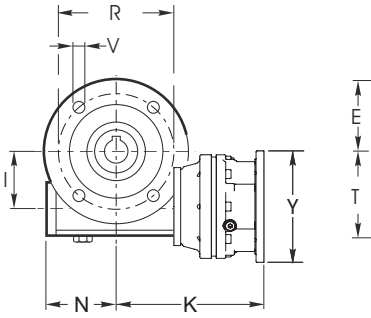

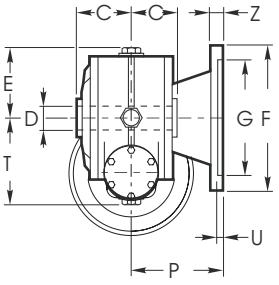

Dimensioni generali / *Dimensions* / Allgemeine Abmessungen						
Dimensions		**130**	**150**	**180**	**215**	**250**
C		90	105	120	140	160
D	Standard	48	55	65	90	110
	Optional	-	-	-	-	-
tollerance D		H7	H7	H7	H7	H7
I		130	150	180	215	250
N		161,5	189	232	275	329
E		154	178	210	249	289
T		195	224	265	332	383

P - PP - Versioni / *Versions* / Ausführungen					
Versions - P - PP	**130**	**150**	**180**	**215**	**250**
Fp	242	250	300	348	450
Gp	180	180	230	250	350
tollerance Gp	e8	e8	e8	e8	e8
Pp	87	102	117	135	155
Rp	215	215	265	300	400
Up	5	5	5	5	5
Vp	M12	M14	M16	M16	M16

1.8 Dimensioni

1.8 Dimensions

1.8 Abmessungen

FL - Versioni / *Versions* / Ausführungen					
Versions FL	**130 FL**	**150 FL**	**180 FL**	**215 FL**	**250 FL**
F	300	350	400	550	550
G	230	250	300	450	450
tollerance G	H8	H8	H8	H8	H8
P	150	160	180	240	245
R	265	300	350	500	500
U	5	6	6,5	7	6
V	15	19	22	18	22
Z	18	18	22	25	25

F1-F2-F3-F4 - Versioni / *Versions* / Ausführungen	
Versions F1-F2-F3-F4	**180 F2**
F	400
G	300
tollerance G	H8
P	150
R	350
U	6,5
V	22
Z	22

CB - Versione Entrata / *Input version* / Antriebausführung							
CB		**110**	**130**	**150**	**180**	**215**	**250**
IEC	**Y**	**K**	**K**	**K**	**K**	**K**	**K**
56 B5	120	-	-	-	-	-	-
56 B14	80	-	-	-	-	-	-
63 B5	140	-	295	333.5	386	463	523
63B14	90	-	-	-	-	-	-
71 B5	160	-	295	333.5	386	463	523
71B14	105	-	-	-	-	-	-
80 B5	200	229	295	333.5	386	463	523
80 B14	120	-	-	-	-	-	-
90 B5	200	229	295	333.5	386	463	523
90 B14	140	-	-	-	-	-	-
100-112 B5	250	239	303	341.5	394	471	531
100-112 B14	160	-	-	-	-	-	-
132 B5	300	-	324	362.5	415	492	552
132 B14	200	-	-	-	-	-	-
160 B5	350	-	358	396.5	465	542	591
180 B5	350	-	358	396.5	465	542	591
200 B5	400	-	-	-	449	526	589
225 B5	450	-	-	-	484	561	612.5
250 B5	550	-	-	-	-	-	612.5
280 B5	550	-	-	-	-	-	612.5

(•) Vedi designazione 19 - PMT

(•) See designation 19 - PMT

(•) Siehe Beschreibung 19 - PMT

CR - Versione Entrata / *Input version* / Antriebausführung					
CR	**130**	**150**	**180**	**215**	**250**
d	38	38	48	48	65
tollerance d	h7	h7	h7	h7	h7
L	58	58	82	82	105
m	M12	M12	M16	M16	M20
M	303	341,5	412	489	624,5

1.8 Dimensioni

Esecuzione con vite bisporgente

1.8 Dimensions

Double extended input shaft

1.8 Abmessungen

Ausführung mit Wellenzapfen auf beiden Seiten

RI - CR - CRI	28	40	50	63	70	85	110	130	150	180	215	250
d	9	11	14	18	19	24	28	38	42	48	48	55
tollerance d	j6	j6	j6	j6	j6	j6	j6	j6	j6	j6	m6	m6
L	20	22	30	45	40	50	60	80	100	110	110	110
m	M4	M5	M6	M6	M8	M8	M8	M10	M12	M14	M16	M16
M	47	64	74	96	97	115	146	166	193	235	289,5	334
M0	47	64	74	85	97	115	146	166	193	235	289,5	334

RI

CR

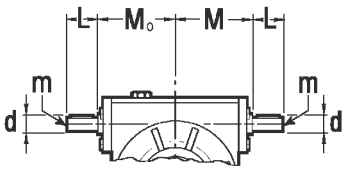

RMI

CB

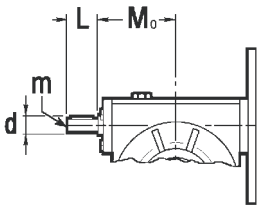

Nei riduttori combinati è necessario specificare se questa configurazione è riferita al primo riduttore (in entrata) o al secondo riduttore (in uscita).

In combined gearboxes, it is necessary to specify if such configuration refers to the first gearbox (input gearbox) or to the second one (output gearbox).

Bei den Kombinationsgetrieben muß angegeben werden, ob sich die Konfiguration auf das erste Getriebe (Eingang) oder auf das zweite (Ausgang) bezieht.

CRI
CRMI

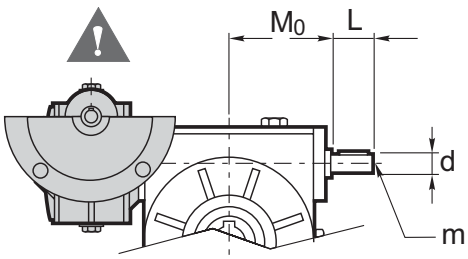

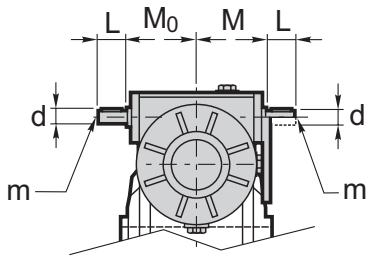

1.8 Dimensioni

Accoppiamenti

E' inoltre disponibile un kit che permette di combinare modularmente i riduttori, utilizzando un riduttore in entrata in versione flangiata e il riduttore in uscita predisposto con flangia attacco motore IEC.
La tabella seguente indica le possibili combinazioni.

1.8 Dimensions

Coupling

To make you more flexible it is also possible to supply the gearboxes seperately and to combine them with an assembling kit. For this we deliver the input gearbox in the flanged version and the output gearbox with IEC motor connecting flange.
The possible combinations and the assembling kits are listed below.

1.8 Abmessungen

Kupplung

Um bei der Kombination der Getrebe vorort flexibler zu sein, beiten wir einen Montage-Kit an, mit dessen Hilfe ein Standardgetriebe mit Abtriebsflansch in der ersten Übersetzungsstufe und ein Standardgetriebe mit IEC-Eingangsflansch in der zweiten Übersetzungsstufe kombiniert werden können.
Die Kombinationsmöglichkeiten sowie die zugehörigen Montage-Kits sind in der folgenden Tabelle aufgelistet.

B

Nei riduttori e motovariatori combinati **28/28** (accoppiati con kit di montaggio) l'asse della vite del 1° riduttore è sempre inclinata di 45° rispetto all'asse orizzontale o verticale. Specificare la posizione in fase di ordine.

*In the combined worm gearboxes and motor-variators **28/28** (coupled with an assembly kit) the wormshaft axis of the first gearbox has always a tilt of 45° compared to the horizontal or vertical axis. The position has to be specified in the order.*

Wird das Kombinationsgetriebe **28/28** mit Hilfe des Montagekits gebildet, so befindet sich die Achse des ersten Getriebes immer in 45º bezüglich zur Horizontalen bzw. Vertikalen. Bei Auftragserteilung bitte die Montageposition angeben.

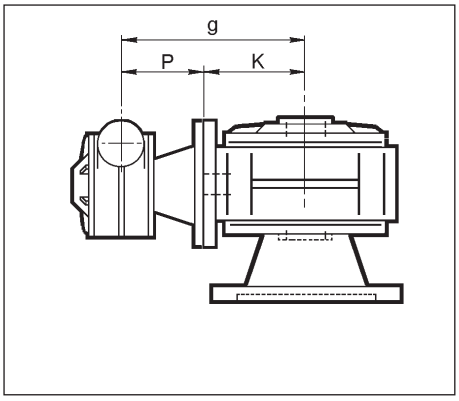

CRI CRMI	P	K	g	Riduttore in entrata *Input gearbox* Erstes Getriebe	Kit di montaggio *Assembling kit* Montage-kit	Riduttore uscita *Output gearbox* Zweites Getriebe
28/28	53	49	102	**28 F1**	KIT 28/28	**28 IEC56 B14**
40/40	82	71	153	**40 FL**	KIT 40/40G	**40 IEC63 B5**
40/50	82	81	163	**40 FL**	KIT 40/50G	**50 IEC140/14**
50/50	91.5	77	168.5	**50 FL**	KIT 50/50G	**50 IEC71 B5**
40/63	82	95	177	**40 FL**	KIT 40/63G	**63 IEC140/19**
50/63	91.5	95	186.5	**50 FL**	KIT 50/63G	**63 IEC160/19**
63/63	82	95	177	**63 F3**	KIT 63/63G	**63 IEC160/19**
40/70	8	100	182	**40 FL**	KIT 40/70	**70 IEC140/19**
50/70	91.5	100	191.5	**50 FL**	KIT 50/70	**70 IEC160/19**
63/70	82	100	182	**63 F3**	KIT 63/70	**70 IEC160/19**
70/70	111	100	211	**70 FL**	KIT 70/70	**70 IEC80 B5**
40/85	82	120	202	**40 FL**	KIT 40/85	**85 IEC90 B14**
50/85	91.5	116	209.5	**50 FL**	KIT 50/85	**85 IEC160/24**
63/85	82	116	200	**63 F3**	KIT 63/85	**85 IEC160/24**
70/85	111	116	229	**70 FL**	KIT 70/85	**85 IEC90 B5**
85/85	100	116	218	**85 FL**	KIT 85/85	**85 IEC90 B5**
50/110	91.5	146	237.5	**50 FL**	KIT 50/110	**110 IEC100 B14**
63/110	82	146	228	**63 F3**	KIT 63/110	**110 IEC100 B14**
70/110	111	145	256	**70 FL**	KIT 70/110	**110 IEC200/28**
85/110	100	145	245	**85 FL**	KIT 85/110	**110 IEC200/28**
63/130	102	163	265	**63 F2**	KIT 63/130	**130 IEC200/28**
110/215	150	285	435	**110 FL**	KIT 110/215	**215 IEC250/42**
130/250	150	335	485	**130 FL**	KIT 130/250	**250 IEC300/48**

1.8 Dimensioni

1.8 Dimensions

1.8 Abmessungen

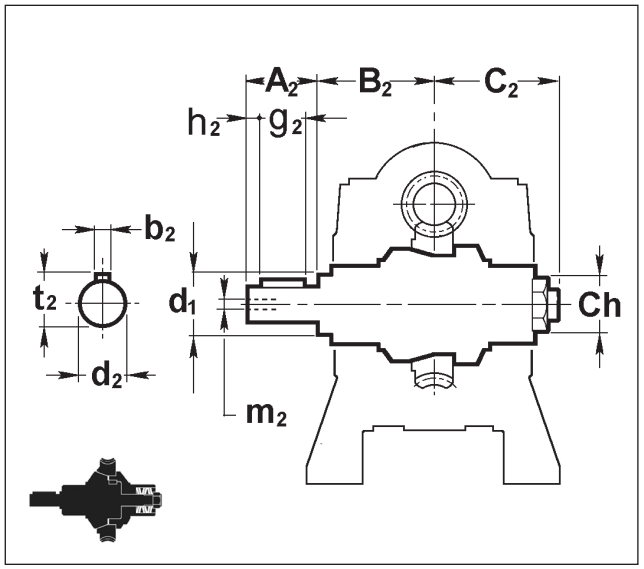

		RI - RMI - CRI - CRMI								
		28	**40**	**50**	**63**	**70**	**85**	**110**	**130**	**150**
LP	**Ch**	17	19	22	24	24	27	32	46	46
	b_2	5	6	8	8	8	10	12	14	16
	d_1	17	22	28	32	34	38	50	60	63
	d_2 k6	14	19	24	25	28	32	42	48	55
	t_2	16	21.5	27	28	31	35	45	51.5	59
	A_2	29.5	40	45	60	60	71	100	110	110
	B_2	31.5	51	59	65	70	71	87.5	110	125
	C_2	41	49	60	70	66	75	94.5	118	110
	h_2	5	7	7.5	8	10	10	10	10	10
	g_2	20	25	30	40	40	50	80	90	90
	m_2	M6	M8	M8	M8	M8	M10	M10	M10	M12
			40	**50**		**70**	**85**	**110**		
			CR -CB							

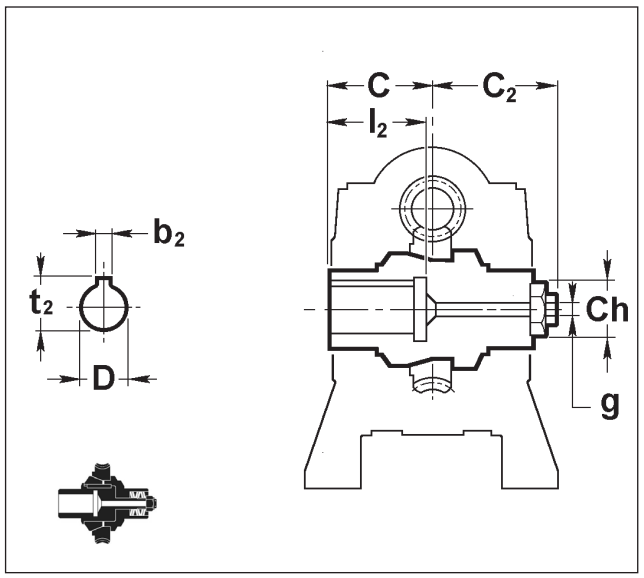

		RI - RMI - CRI - CRMI								
		28	**40**	**50**	**63**	**70**	**85**	**110**	**130**	**150**
LC	**Ch**	17	19	22	24	24	27	32	46	46
	b_2	5	6	8	8	8	10	12	14	16
	D_{H7}	14	19	24	25	28	32	42	48	55
	t_2	16.3	21.8	27.3	28.3	31.3	35.3	45.3	51.8	59.3
	C	30	41	49	60	60	61	77.5	90	105
	C_2	41	49	60	70	66	75	94.5	118	110
	l_2	27	38	46	53	56	60	90	97	110
	g	4.5	5.5	7	7	9	9	11	11	11
			40	**50**		**70**	**85**	**110**		
			CR - CB							

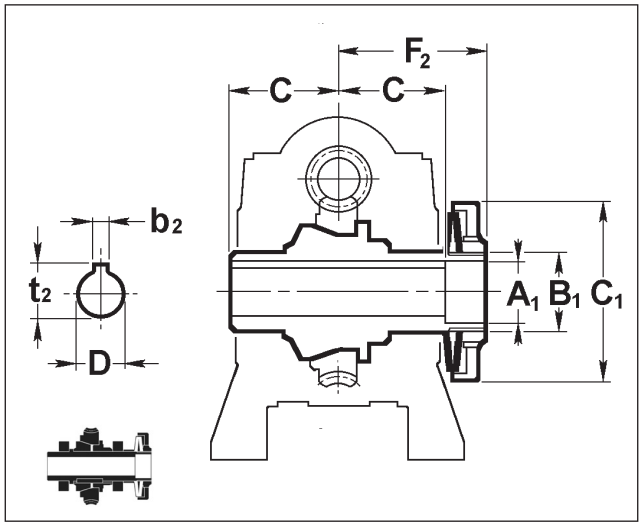

		RI - RMI - CRI - CRMI							
		40	**50**	**63**	**70**	**85**	**110**	**130**	**150**
LF	**D_{H7}**	19	24	25	28	32	42	48	55
	b_2	6	8	8	8	10	12	14	16
	t_2	21.8	27.3	28.3	31.3	35.3	45.3	51.8	59.3
	A_1	25	31	32	36	40	51	59	66
	B_1	M30	M40	M40	M45	M50	M60	M75	M80
	C_1	70	90	90	100	110	135	140	165
	C	41	49	60	60	61	77.5	90	105
	F_2	60	74	85	85	84	110.5	130	155
		40	**50**		**70**	**85**	**110**		
		CR - CB							

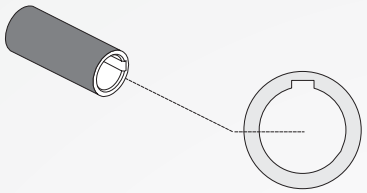

B99

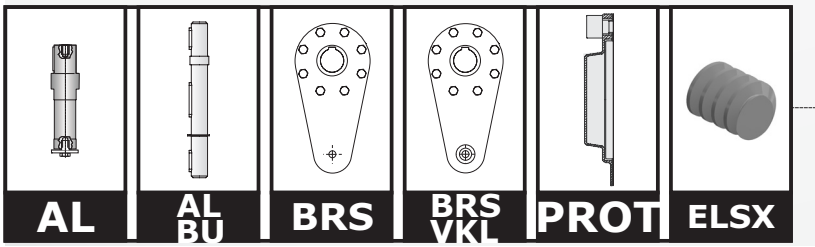

B100

1.8.1 - ALBERI LENTI

1.8.1 - OUTPUT SHAFT

1.8.1 - ABTRIEBSWELLEN

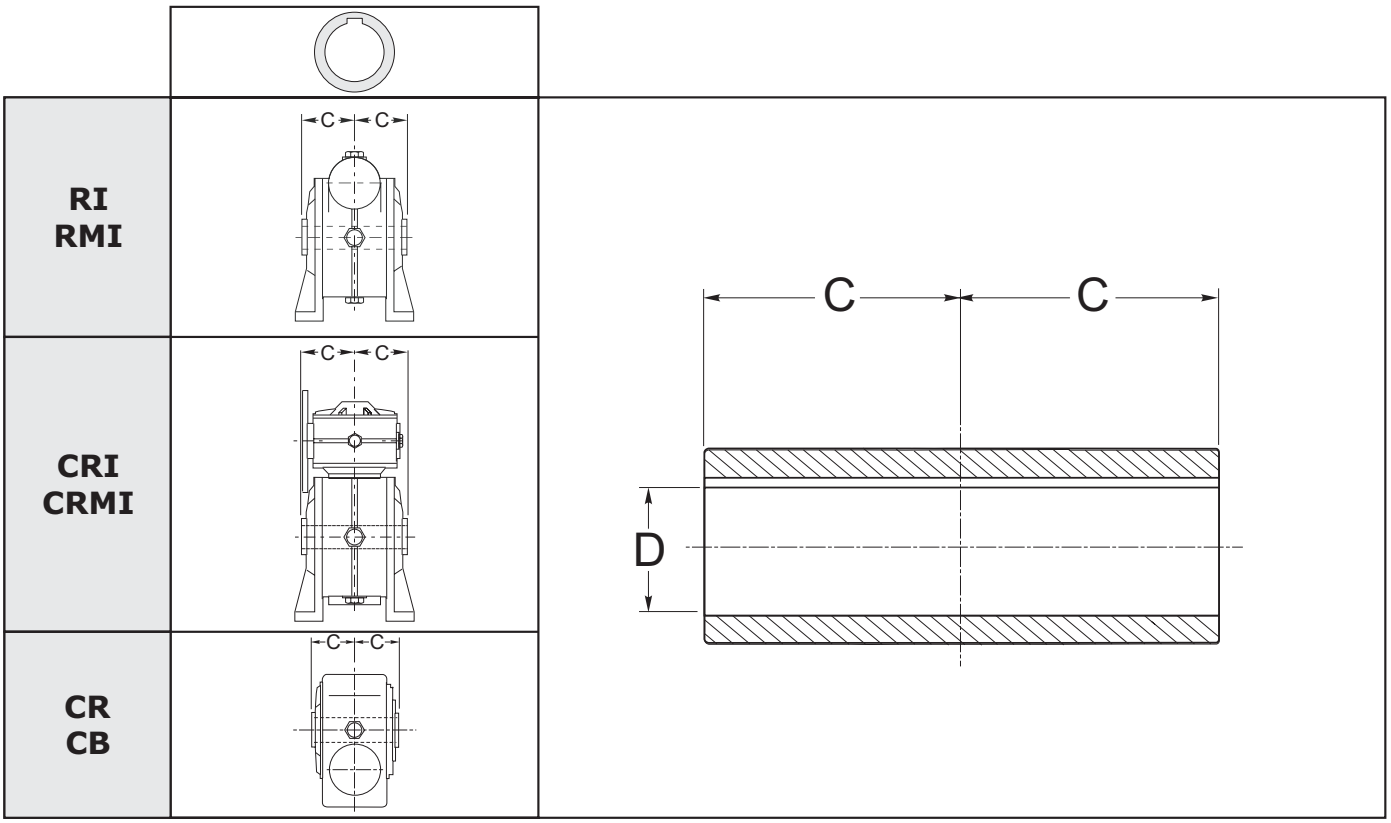

RI - RMI		28	40	50	63	70	85	110	130	150	180	215	250
CRI - CRMI		28/28	28/40 40/40	28/50 40/50	28/63 40/63	28/70 40/70 50/70 63/70	40/85 50/85 63/85 70/85	50/110 63/110 70/110 85/110	63/130 70/130 85/130	85/150 110/150	85/180 110/180 130/180	110/215	13/250
CR - CB		—	40	50	—	70	85	110	130	150	180	215	250
D	Standard	14	19	24	25	28	32	42	48	55	65	90	110
	Optional	-	18	25	-	-	35	-	-	-	-	-	-
tollerance D		H7	H7	H7	H7	H7	H7	H7	H7	H7	H7	H7	H7
C		30	41	49	60	60	61	77,5	90	105	120	140	160

Perno macchina / *Customer shaft* / Maschinachse

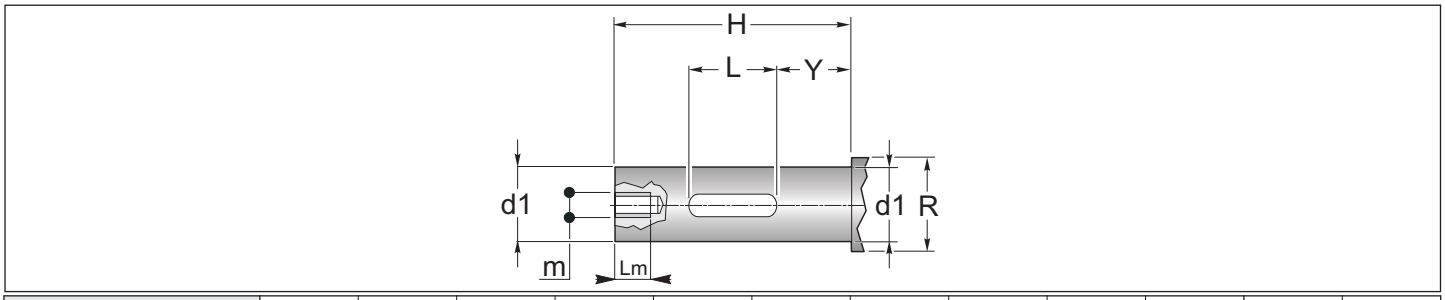

RI - RMI		28	40	50	63	70	85	110	130	150	180	215	250
CRI - CRMI		28/28	28/40 40/40	28/50 40/50	28/63 40/63	28/70 40/70 50/70 63/70	40/85 50/85 63/85 70/85	50/110 63/110 70/110 85/110	63/130 70/130 85/130	85/150 110/150	85/180 110/180 130/180	110/215	130/250
CR - CB		—	40	50	—	70	85	110	130	150	180	215	250
d1	Standard	14	19	24	25	28	32	42	48	55	65	90	110
	Optional	-	18	25	-	-	35	-	-	-	-	-	-
tollerance d1		g6	g6	g6	g6	g6	g6	g6	g6	g6	g6	g6	g6
H		58	80	95	109	117	119	153	177	207	239	275	315
L		20	40	50	60	60	70	80	90	100	120	160	200
m		M6	M8	M8	M8	M8	M10	M10	M10	M12	M14	M16	M20
Lm		16	16	20	20	20	25	25	25	32	35	40	50
R	Standard	17	22	28	34	34	38	50	58	63	78	109	125
	Optional	-	22	30	-	-	40	-	-	-	-	-	-
Y		20	21	24	30	30	26	37	45	55	60	60	60

1.9 OPT - ACC. - Accessori - Opzioni

1.9 OPT - ACC. - Accessories - Options

1.9 OPT - ACC. Zubehör - Optionen

AL — AL - ALBERO LENTO SPORGENTE / AL - SINGLE OUTPUT SHAFTS / AL - EINSEITIGE ABTRIEBSWELLEN

Tutti i riduttori a vite senza fine sono forniti con albero lento cavo.
A richiesta, possono essere forniti alberi lenti come indicato nei disegni dimensionali.
Le dimensioni delle linguette sono conformi alle norme UNI 6604-69.

All worm gearboxes are supplied with hollow output shaft. Output shafts as shown in the size drawings can be supplied upon request.

Sizes of feathers comply with standards UNI 6604-69.

AL BU — AL_BU - ALBERO LENTO BISPORGENTE / AL_BU - DOUBLE OUTPUT SHAFTS / AL_BU - BEIDSEITIGE ABTRIEBSWELLEN

Alle Schneckengetriebe werden mit hohler Abtriebswelle geliefert. Auf Anfrage können Abtriebswellen gemäß den Maßzeichnungen geliefert werden.

Die Abmessungen der Federn entsprechen den Normen UNI 6604-69.

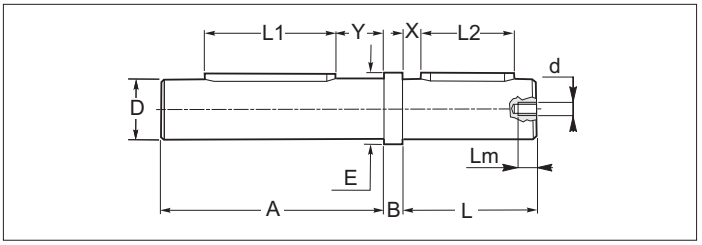

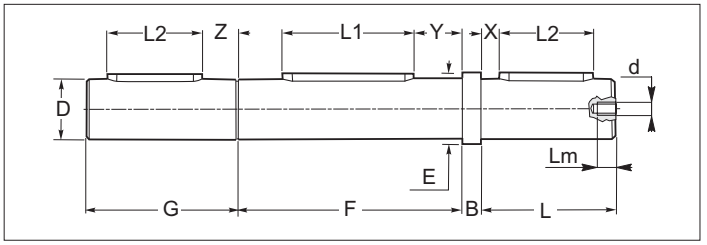

RI RMI

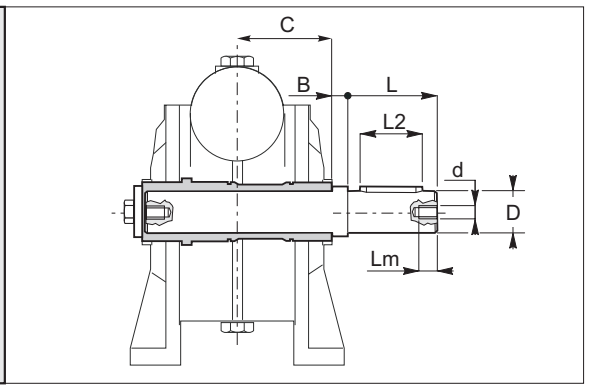

RI RMI

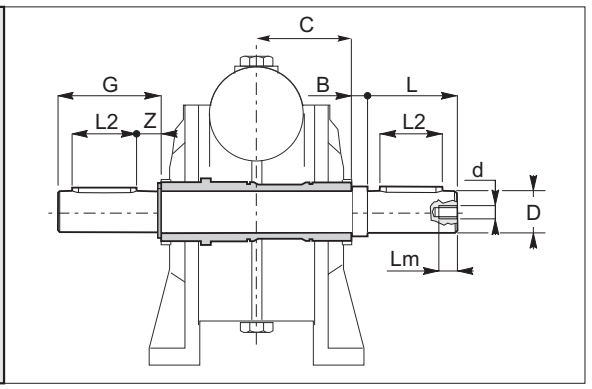

CRI CRMI

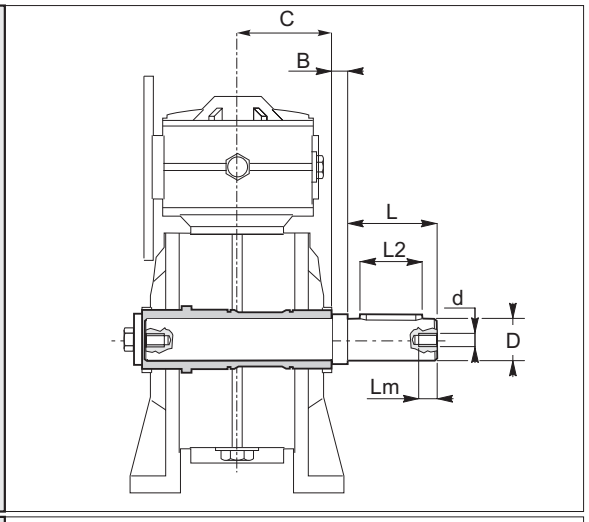

CRI CRMI

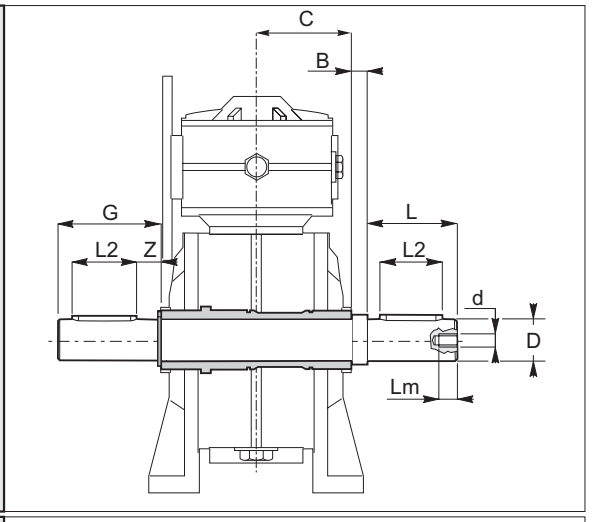

CR CB

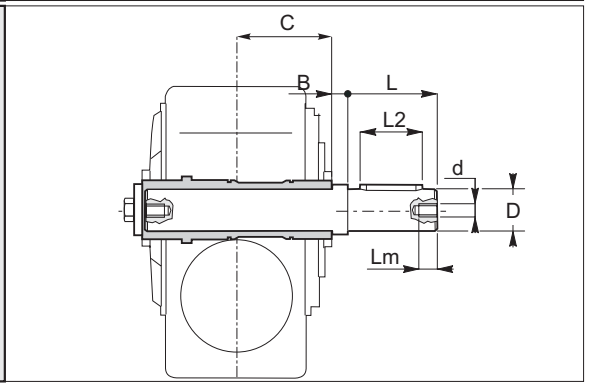

CR CB

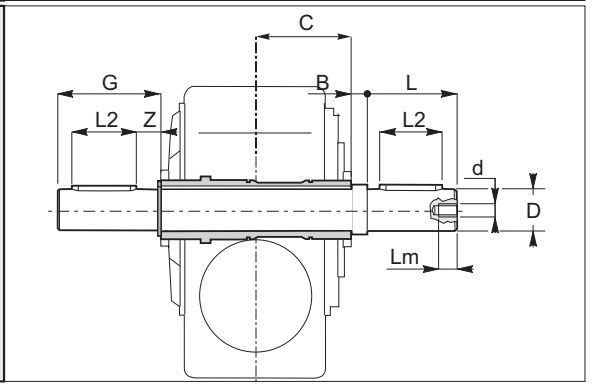

1.9 OPT - ACC. - Accessori - Opzioni

1.9 OPT - ACC. - Accessories - Options

1.9 OPT - ACC. Zubehör - Optionen

AL

AL - ALBERO LENTO SPORGENTE
AL - SINGLE OUTPUT SHAFTS
AL - EINSEITIGE ABTRIEBSWELLEN

AL BU

AL_BU - ALBERO LENTO BISPORGENTE
AL_BU - DOUBLE OUTPUT SHAFTS
AL_BU - BEIDSEITIGE ABTRIEBSWELLEN

B

RI - RMI	28	40	50	63	70	85	110	130	150	180	215*	250*
CRI - CRMI	28/28	28/40 40/40	28/50 40/50	28/63 40/63	28/70 40/70 50/70 63/70	40/85 50/85 63/85 70/85	50/110 63/110 70/110 85/110	63/130 70/130 85/130	85/150 110/150	85/180 110/180 130/180	110/215 *	130/250 *
CR - CB	—	40	50	—	70	85	110	130	150	180	215*	250*
A	58	76	89	109	117	119	153	177	207	239	-	-
B	1,5	10	10	10	10	10	10	20	20	20	10	10
C	30	41	49	60	60	61	77,5	90	105	120	140	160
D	14	19	24	25	28	32	42	48	55	65	90	110
tollerance D	g6	g6	g6	g6	g6	g6	g6	g6	g6	g6	m6	m6
d	M6	M8	M8	M8	M8	M10	M10	M10	M12	M14	M16	M20
E	17	22	28	34	34	38	50	58	63	78	109	125
F	60	82	98	120	120	122	155	180	210	240	-	-
G	31	50	55	70	70	81	110	130	130	150	-	-
L	29,5	40	45	60	60	71	100	110	110	130	130	165
L1	20	40	50	60	60	70	80	90	100	120	-	-
L2	20	25	30	40	40	50	80	90	90	100	110	140
Lm	16	16	20	20	20	25	25	25	32	35	40	50
X	4,5	8	7,5	10	10	10	10	10	10	15	10	12,5
Y	20	21	24	30	30	26	37	15	55	60	-	-
Z	6	18	18	20	20	20	20	30	30	35	-	-

* A richiesta / On request / Auf Anfrage
Grandezza / Size / Größe **215 - 250**
AL - AL_BU - Albero integrale / *integral output shaft* / Integralwelle

ATTENZIONE
L'albero lento sporgente è fornito per essere installato sulla versione del riduttore con albero **CAVO** con diametro **STANDARD**.

ATTENTION
The output shaft is available only for standard hollow shaft diameter.

Achtung:
Die Einseitige Abtriebswelle wird fuer die Montage bei Getrieben mit Standart Hohlwelle geliefert.

N.B.
Tutti gli alberi lenti vengono forniti in kit di montaggio completi di linguette, rondelle, viti (e anelli elastici seeger per l'albero bisporgente)

NOTE
All output shafts are supplied in kit complete with feathers, washers and screws (as well as snap rings for the double extended shaft).

HINWEIS
Alle Abtriebswellen werden als Bausätze komplett mit Federn, Scheiben und Schrauben geliefert (bei der beidseitigen Abtriebswelle auch die Seegerringe).

1.9 OPT - ACC. - Accessori - Opzioni

1.9 OPT - ACC. - Accessories - Options

1.9 OPT - ACC. Zubehör - Optionen

BRS — **BRS - Braccio Reazione Semplice**
BRS- Torque arm – Single
BRS- Drehmomentstütze – Normal

Standard

Per il fissaggio del riduttore mediante tirante, viene fornito in allegato l'apposito braccio di reazione.

If the gearbox shall be shaft mounted as an extra part there is also available a torque arm.

BRS VKL — **BRS_VKL - Braccio Reazione Semplice_con boccola_VKL**
BRS_VKL - Torque arm - Single_with VKL_bushing
BRS_VKL - Drehmomentstütze - Normal_mit VKL - Buchse

Soll das Getriebe pendelnd gelagert werden, so ist als Zubehörteil auch eine Drehmomentstütze.

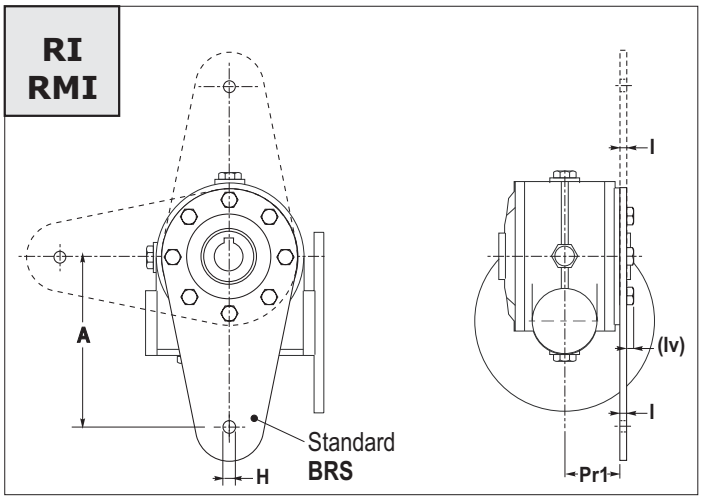

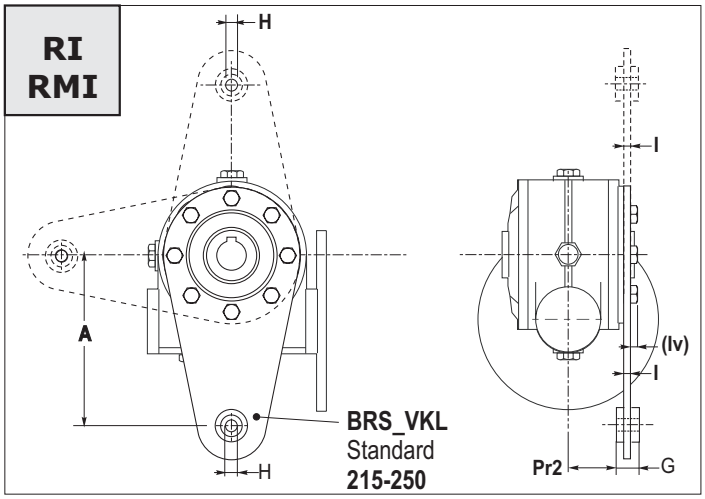

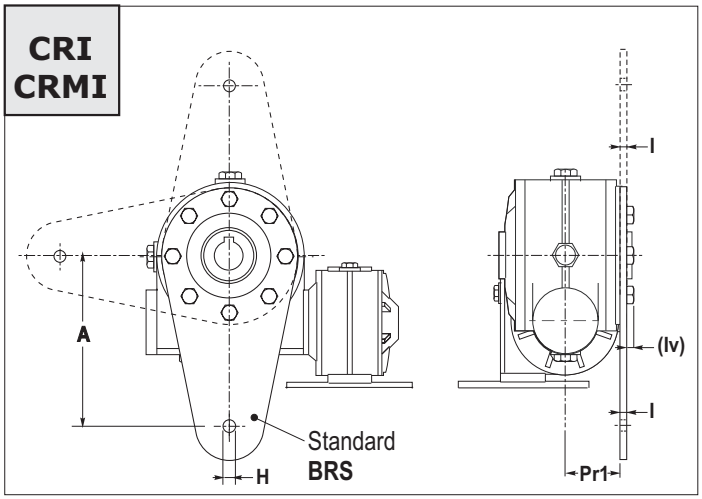

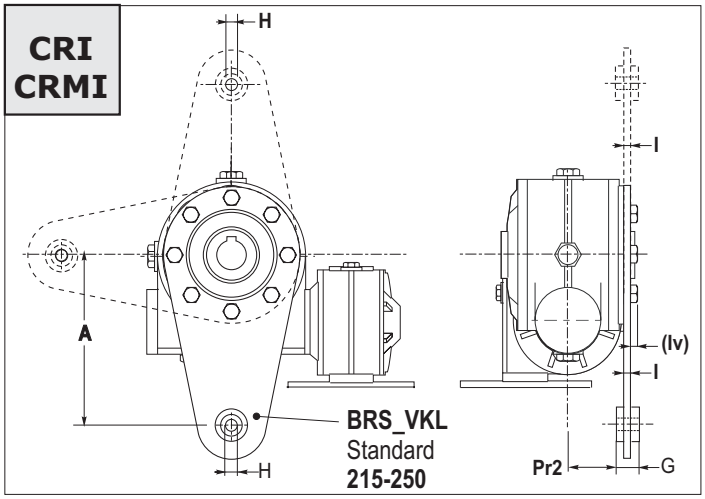

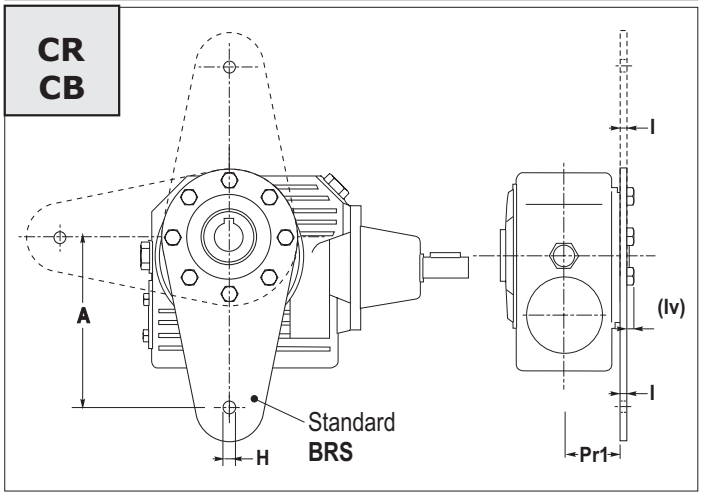

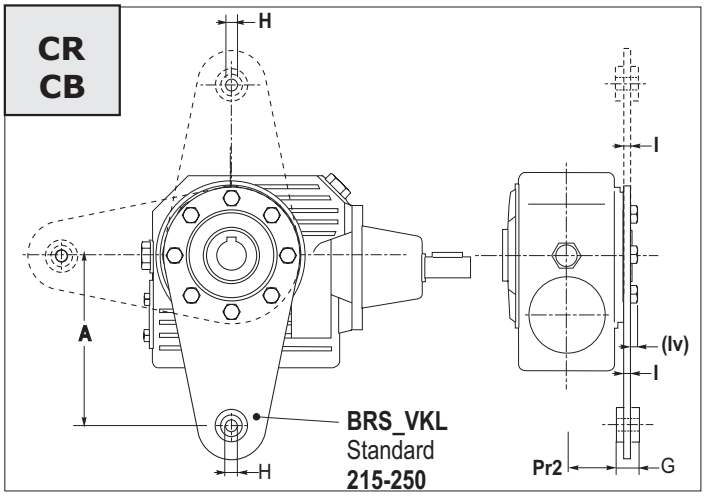

1.9 OPT - ACC. - Accessori - Opzioni

1.9 OPT - ACC. - Accessories - Options

1.9 OPT - ACC. Zubehör - Optionen

BRS BRS - Braccio Reazione Semplice
BRS- Torque arm – Single
BRS- Drehmomentstütze – Normal

Standard

BRS VKL BRS_VKL - Braccio Reazione Semplice_con boccola_VKL
BRS_VKL - Torque arm - Single_with VKL_bushing
BRS_VKL - Drehmomentstütze - Normal_mit VKL - Buchse

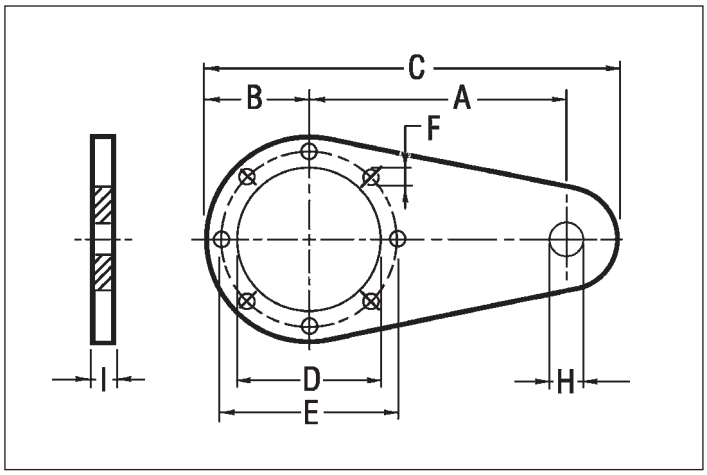

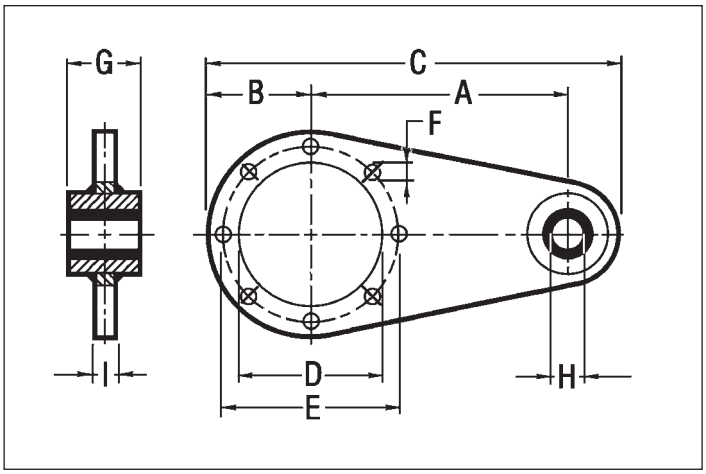

B

RI - RMI	28	40	50	63	70	85	110	130	150	180	215	250
CRI - CRMI	28/28	28/40 40/40	28/50 40/50	28/63 40/63	28/70 40/70 50/70 63/70	40/85 50/85 63/85 70/85	50/110 63/110 70/110 85/110	63/130 70/130 85/130	85/150 110/150	85/180 110/180 130/180	110/215	130/250
CR - CB	—	40	50	—	70	85	110	130	150	180	215	250
A	70	90	100	150	150	200	250	300	350	400	350	400
B	34,5	50	52.5	53	60	75	100	120	125	150	175	225
C	119,5	165	177.5	230	240	313	388	465	525	610	625	725
D	42,15	60	70	70	80	110	130	180	180	230	250	350
E	56	83	85	85	100	130	165	215	215	265	300	400
F	6,5	7	9	9	9	11	13	13	15	17	17	19
G		15	15	20	20	25	25	30	30	35	60	60
H	9	10	10	10	10	20	20	25	25	35	50	50
I	4	4	4	6	6	6	6	6	6	10	8	10
Pr1	36	38	49	57,5	57	56,5	74	87	102	117	—	—
Pr2	—	32,5	43,5	50,5	50	47	64,5	75	90	104,5	109	130

PROT PROT. - Coperchio di protezione

PROT. - Protection cover

PROT - Schultzvorrichtungdeckel

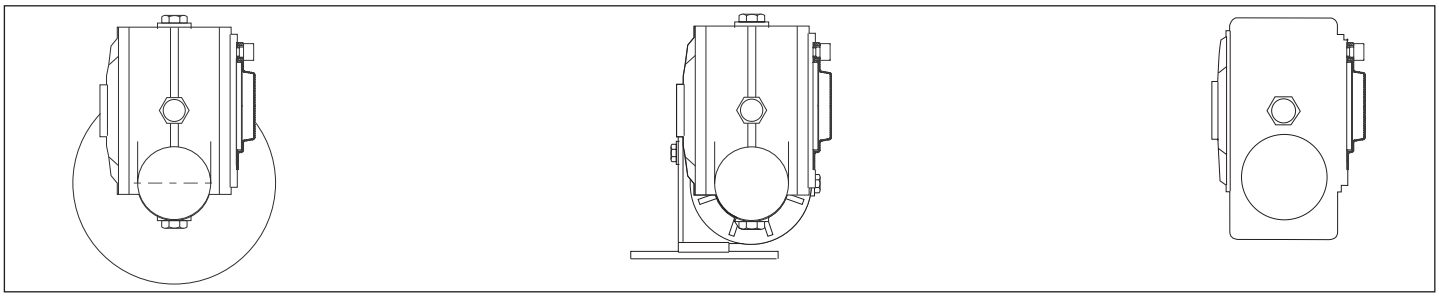

ELSX ELSX - Vite senza fine - Elica Sinistra

ELSX - Worm Geraboxe - Left helix

ELSX - Linksgängige Schraubenlinie der Schneke

Standard

1.10 Linguette

1.10 Keys

1.10 Paßfedern

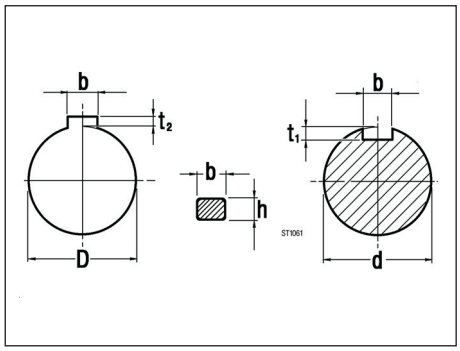

Albero entrata
Input shaft
Antriebswelle

d	b x h	t_1	
9	3 x 3	1.8	
11	4 x 4	2.5	
14	5 x 5	3.0	$^{+0.1}_{0}$
18	6 x 6	3.5	
19	6 x 6	3.5	
24	8 x 7	4.0	
28	8 x 7	4.0	
30	8 x 7	4.0	
35	10 x 8	5.0	
38	10 x 8	5.0	$^{+0.2}_{0}$
42	12 x 8	5.0	
48	14 x 9	5.5	
55	16 x 10	6.0	
65	18 x 11	7.0	

Albero uscita
Output shaft
Abtriebswelle

D	b x h	t_2	
11	4 x 4	1.8	
14	5 x 5	2.3	
18	6 x 6	2.8	$^{+0.1}_{0}$
19	6 x 6	2.8	
24	8 x 7	3.3	
25	8 x 7	3.3	
28	8 x 7	3.3	
30	8 x 7	3.3	
32	10 x 8	3.3	
35	10 x 8	3.3	
40	10 x 8	3.3	
42	12 x 8	3.3	
48	14 x 9	3.8	
50	14 x 9	3.8	$^{+0.2}_{0}$
55	16 x 10	4.3	
60	18 x 11	4.3	
65	18 x 11	4.4	
70	20 x 12	4.9	
80	22 x 14	5.4	
90	25 x 14	5.4	
100	28 x 16	6.4	
110	28 x 16	6.4	